Redwood Coast Energy Authority
633 3rd Street, Eureka, CA 95501
Phone: (707) 269-1700 Toll-Free (800) 931-RCEA Fax: (707) 269-1777
E-mail: info@redwoodenergy.org Web: www.redwoodenergy.org

BOARD OF DIRECTORS MEETING AGENDA

Humboldt Bay Municipal Water District Office **February 28, 2019**
828 7th Street, Eureka, CA 95501 **Thursday, 3:30 p.m.**

In compliance with the Americans with Disabilities Act, if you need assistance to participate in this meeting, please contact the Clerk of the Board at the phone number, email or physical address listed above at least 72 hours in advance.

Pursuant to Government Code section 54957.5, all writings or documents relating to any item on this agenda which have been provided to a majority of the Board of Directors, including those received less than 72 hours prior to the RCEA Board meeting, will be made available to the public in the agenda binder located in the RCEA lobby during normal business hours, and at *www.redwoodenergy.org*.

PLEASE NOTE: Speakers wishing to distribute materials to the Board at the meeting are asked to provide 12 copies to the Clerk of the Board.

OPEN SESSION Call to Order

1. REPORTS FROM MEMBER ENTITIES

2. ORAL COMMUNICATIONS

This time is provided for people to address the Board or submit written communications on matters not on the agenda. At the conclusion of all oral and written communications, the Board may respond to statements. Any request that requires Board action will be set by the Board for a future agenda or referred to staff.

3. CLOSED SESSION

3.1 Public Employee Performance Evaluation, pursuant to Government Code Section 54957(b)(1): Executive Director

3.2 Conference with labor negotiator pursuant to Government Code Section 54957.6:
RCEA representative: Director Sheri Woo.
Unrepresented employee: Executive Director

4. RECONVENE TO OPEN SESSION

5. REPORT FROM CLOSED SESSION

6. CONSENT CALENDAR

All matters on the Consent Calendar are considered to be routine by the Board and are enacted on one motion. There is no separate discussion of any of these items. If discussion is required, that item is removed from the Consent Calendar and considered separately. At the end of the reading of the Consent Calendar, Board members or members of the public can request that an item be removed for separate discussion.

6.1 Approve Minutes of January 28, 2019, Board Meeting.

6.2 Approve Disbursements Report.
6.3 Accept Financial Reports.
6.4 Receive the 2017 Power Source Disclosure Audit.
6.5 Approve Amendment No. 4 to Agreement for Employment of Executive Director with Matthew Marshall.
6.6 Authorize the Executive Director to execute an amendment to the power purchase agreement with Humboldt Sawmill Company with the following key contract adjustments:

- Extend contract end date to 2024.
- Reduce unit price for the period March 1, 2019-December 31, 2019 to $65/MWh, thereafter increasing to a price of $67/MWh, subject to an annual consumer price index adjustment beginning on the anniversary of the contract amendment in 2021.

7. REMOVED FROM CONSENT CALENDAR ITEMS

Items removed from the Consent Calendar will be heard under this section.

8. OLD BUSINESS

8.1 FY 16-17 Fiscal Audit – Independent Auditor's Report (Information only)

8.2 ACV Microgrid Updates, Construction Agreement, MOU and Lease

Authorize the Executive Director to develop and execute, upon approval by the RCEA General Counsel, an agreement with Tesla Inc. for engineering, procurement, and construction services for the Redwood Coast Airport Renewable Energy Microgrid Project and any other associated documents as necessary.

Authorize the Executive Director to execute the Redwood Coast Airport Renewable Energy Microgrid Memorandum of Understanding based on pending mutual agreement of all parties.

8.3 Finance Subcommittee Membership

Appoint up to two more directors to the Finance Subcommittee for one-year terms ending on the first regular Board meeting of 2020.

9. NEW BUSINESS – None.

COMMUNITY CHOICE ENERGY (CCE) BUSINESS (Confirm CCE Quorum)

Items under this section of the agenda relate to CCE-specific business matters that fall under RCEA's CCE voting provisions, with only CCE-participating jurisdictions voting on these matters with weighted voting as established in the RCEA joint powers agreement.

10. OLD CCE BUSINESS

10.1. Offshore Wind Project Update (Information only)

11. NEW CCE BUSINESS

11.1 Community Advisory Committee 100% Clean and Renewable 2025 Goal Recommendation

Discuss and direct staff on next steps.

11.2 PG&E Bankruptcy Update (Information only)

END OF COMMUNITY CHOICE ENERGY (CCE) BUSINESS

12. STAFF REPORTS

12.1 Update by Demand Side Management Director Lou Jacobson on RCEA's Energy Efficiency programs.

12.2 Report from Acting Executive Director Dana Boudreau.

13. FUTURE AGENDA ITEMS

14. CLOSED SESSION

14.1 Closed Session to meet with legal counsel per Government Code Section 54956.9(c), In re PG&E, Bankruptcy Court, 19-30088, Northern District of California.

15. RECONVENE TO OPEN SESSION

16. REPORT FROM CLOSED SESSION

17. ADJOURNMENT

NEXT REGULAR MEETING – NEW DAY AND TIME
Thursday, March 28, 2019, 3:30 p.m.
Humboldt Bay Municipal Water District Office
828 7th Street, Eureka, CA 95501

This page intentionally left blank.

Redwood Coast Energy Authority
633 3rd Street, Eureka, CA 95501
Phone: (707) 269-1700 Toll-Free (800) 931-RCEA Fax: (707) 269-1777
E-mail: info@redwoodenergy.org Web: www.redwoodenergy.org

DRAFT BOARD OF DIRECTORS MEETING MINUTES

Humboldt Bay Municipal Water District Office **January 28, 2019**
828 7th Street, Eureka, CA 95501 **Monday, 3:15 p.m.**

Chair Sheri Woo called a regular meeting of the Board of Directors of the Redwood Coast Energy Authority to order on the above date at 3:16 p.m. Notice of this meeting was posted on January 24, 2019. PRESENT: Estelle Fennell (arrived at 3:23 p.m.), Dean Glaser, Dwight Miller, Robin Smith, Frank Wilson, Vice Chair Michael Winkler, Chair Sheri Woo. ABSENT: Austin Allison, Summer Daugherty. STAFF PRESENT: Director of Business Development and Planning Lori Biondini, Director of Operations Dana Boudreau, The Energy Authority Consultant Jeff Fuller, Executive Director Matthew Marshall, Power Resources Account Services Manager Mahayla Slackerelli, Clerk of the Board Lori Taketa.

Chair Woo requested addressing agenda item 6.1, New Business - Election of Officers, as the first order of business.

NEW BUSINESS - Election of Officers

Vice Chair Winkler expressed interest in serving as the Board Chair. Chair Woo stated that Director Allison had confirmed his interest in serving as Vice Chair.

Chair Woo invited public comment. No one came forward to speak. Chair Woo closed public comment.

M/S: Glaser, Miller: Appoint Michael Winkler as Chair and Austin Allison as Vice Chair of the Redwood Coast Energy Authority Board of Directors for terms ending at the first regular meeting in 2020.

The motion passed on a unanimous voice vote. Ayes: Fennell, Glaser, Miller, Smith, Wilson, Winkler, Woo. Noes: None. Absent: Allison, Daugherty. Abstentions: None.

REPORTS FROM MEMBER ENTITIES

Director Miller reported the City of Trinidad is hiring a new City Manager. They hope to have one in place in next month.

Director Wilson reported that he will remain on the Board. Rio Dell Mayor Debra Garnes will be the alternate director.

Director Woo reported that Ruth Lake is full and both generators are running at full capacity.

Chair Winkler thanked Director Woo for her service as Board Chair. Chair Winkler stated that he is discussing reach codes or requiring greater energy efficiency requirements for new

buildings than the State code requires, with the Local Government Commission. The City of Arcata recently adopted a reach code and Chair Winkler may request RCEA to draft a model reach code for other jurisdictions to consider.

ORAL COMMUNICATIONS

Chair Winkler invited public comment. No one came forward to speak. Chair Winkler closed public comment.

CONSENT CALENDAR

3.1 Approve Minutes of:
- 3.1.1 December 10, 2018, Special Board Meeting; and
- 3.1.2 December 17, 2018, Regular Board Meeting.

3.2 Approve Disbursements Report.
3.3 Accept Financial Reports.
3.4 Approve the Updated Terms and Conditions for the Community Choice Energy Program.
3.5 Approve the 2019 RCEA Board Meeting Calendar.

Director Woo requested agenda item 3.1.2 be pulled for discussion.

Director Fennell arrived at 3:23 p.m.

Chair Winkler invited public comment. No one came forward to speak. Chair Winkler closed public comment.

M/S: Glaser, Woo: Approve Consent Calendar items with the exception of item 3.1.2

The motion passed on a unanimous voice vote. Ayes: Fennell, Glaser, Miller, Smith, Wilson, Winkler, Woo. Noes: None. Absent: Allison, Daugherty. Abstentions: None.

REMOVED FROM CONSENT CALENDAR ITEMS

Director Woo made a correction to the December 17, 2018 Board meeting minutes. The vote supporting RCEA's staff reorganization was not unanimous. Director Woo placed the sole dissenting vote.

Chair Winkler invited public comment. No one came forward to speak. Chair Winkler closed public comment.

M/S: Miller, Glaser: Approve Consent Calendar item 3.1.2 as amended.

The motion passed on a unanimous voice vote. Ayes: Fennell, Glaser, Miller, Smith, Wilson, Winkler, Woo. Noes: None. Absent: Allison, Daugherty. Abstentions: None.

OLD BUSINESS - FY 16-17 Fiscal Audit – Independent Auditor's Report

Executive Director Marshall reported that the auditor's presentation will be postponed due to illness.

NEW BUSINESS

6.2 Finance Subcommittee

Executive Director Marshall reported that the Directors requested the creation of a standing, publicly-noticed Board Finance Subcommittee as a means to increase organizational transparency and Board understanding of the agency's finances.

Director Woo and Chair Winkler expressed interest in serving on the subcommittee. The directors requested that additional subcommittee members be appointed in February.

Chair Winkler invited public comment. No one came forward to speak. Chair Winkler closed public comment.

M/S: Woo, Fennell: Disband the FY19-20 Ad Hoc Finance Subcommittee, create a standing Finance Subcommittee to meet as needed to work with staff and advise the Board of Directors on matters relating to audit, finance and budget, and to appoint Director Woo and Chair Winkler to the Finance Subcommittee for one-year terms ending on the first regular Board meeting of each year.

The motion passed on a unanimous voice vote. Ayes: Fennell, Glaser, Miller, Smith, Wilson, Winkler, Woo. Noes: None. Absent: Allison, Daugherty. Abstentions: None.

6.3 Community Advisory Committee

Executive Director Marshall reported that former Director Michael Sweeney, who stepped down from the Board after the December 2018 meeting, served as the non-voting Board liaison to the Community Advisory Committee (CAC). At least one director is needed to attend the CAC's quarterly meetings. Six CAC members' terms end in April and all expressed willingness to serve another term. All involved directors recommend reappointment. Executive Director Marshall stated that at the last quarterly meeting, the CAC requested that RCEA set a goal to reach a 100% clean and renewable electricity mix by 2025, similar to goals adopted by the County, Eureka, Arcata and Blue Lake. The CAC further requested that RCEA lead a community discussion on the definition of 100% clean and renewable electricity. Staff will present recommendations for Board consideration at the February meeting.

Chair Winkler invited public comment. No one came forward to speak. Chair Winkler closed public comment.

M/S: Glaser, Miller: Appoint Robin Smith to serve as liaison, and Estelle Fennell to serve as alternate liaison, to the Community Advisory Committee through December 2019.

The motion passed on a unanimous voice vote. Ayes: Fennell, Glaser, Miller, Smith, Wilson, Winkler, Woo. Noes: None. Absent: Allison, Daugherty. Abstentions: None.

M/S: Fennell, Woo: Reappoint Norman Bell, Kit Mann, Kathy Srabian, Richard Johnson, Luna Latimer and Matty Tittman to the Community Advisory Committee for terms expiring April 13, 2021.

The motion passed on a unanimous voice vote. Ayes: Fennell, Glaser, Miller, Smith, Wilson, Winkler, Woo. Noes: None. Absent: Allison, Daugherty. Abstentions: None.

6.4 PG&E Update (Information only)

Executive Director Marshall reported that PG&E was expected to file for bankruptcy on the following day and expressed optimism that customer payments collected by PG&E on behalf of CCAs would continue to be paid to the CCAs. Mr. Marshall stated that the status of PG&E energy efficiency funding was less clear and that reorganization may be in PG&E's future. He and General Counsel Diamond are speaking with CalCCA to determine how the changes may affect RCEA. Mr. Marshall is also monitoring PG&E's discontinuation of their effort to sell the Potter Valley Project.

The directors expressed a desire to ensure local issues such as the Potter Valley Project and the decommissioned nuclear power plant are a priority during the bankruptcy proceedings, a concern about PG&E's opportunity to divest itself of liabilities, the importance of early involvement in the bankruptcy process and collaboration with other CCAs and the possibility of retaining separate bankruptcy counsel.

Chair Winkler invited public comment. No one came forward to speak. Chair Winkler closed public comment.

COMMUNITY CHOICE ENERGY (CCE) BUSINESS

Chair Winkler determined a quorum was present to conduct CCE business.

OLD CCE BUSINESS

7.1. CCE Weighted Voting Revision (Information only)

Executive Director Marshall described the process outlined in the RCEA Joint Powers Agreement where CCE weighted voting shares are recalculated every two years. The number of votes allocated to each jurisdiction is based on the number of CCE customer accounts. The voting shares were recalculated on January 1, 2019. One vote moved from the County to Arcata.

Chair Winkler invited public comment. No one came forward to speak. Chair Winkler closed public comment.

7.2. Energy Risk Management Quarterly Report

Jeff Fuller of The Energy Authority presented a quarterly energy risk management report that incorporated information resulting from the CPUC exit fee (PCIA) decision. Mr. Fuller presented a range of recommendations that adjusted program goals such as renewable energy portfolio percentages, carbon free energy percentages and customer rate discount

relative to PG&E, and corresponding effects on the agency's revenues and reserves. He recommended the Board determine the amount of customer rate savings at this meeting and decide on renewable and carbon free energy portfolio content after PG&E determines their content in March.

The directors and Mr. Fuller discussed the effect of the different scenarios on maintaining the agency's reserves, loan repayment status, the importance of offering lower rates than PG&E's to retain customers, whether it was more important to lower rates to keep customers or to prioritize environmentally-friendly power mix goals, the need for outreach to explain rate savings decreases to customers, the effect of approving the DG Fairhaven contract on cash flow, and the need for higher reserves to maintain rate stability in a volatile market.

Mr. Fuller reported that the CCE program is well procured for 2019 to hedge market price risks and the Risk Management team is working on 2020 and 2021 procurement. The team is finalizing large hydropower and out-of-state renewable purchases.

Chair Winkler invited public comment. An unidentified member of the public stated that 350.org Humboldt members would oppose reductions in renewable or greenhouse gas free energy procurement. She stated that people may not accept a rate savings reduction if $250,000 was budgeted for DG Fairhaven power purchases.

Upon inquiry by member of the public Ellen Golla about whether biomass was counted as carbon free energy in this report, Executive Director Marshall stated that it was not. RCEA's carbon free energy portfolio includes large hydropower which does not qualify for the renewable portfolio standard, he added, and PG&E's carbon free portfolio includes large hydropower and nuclear power.

Chair Winkler closed public comment.

M/S: Miller, Fennell: Accept Energy Risk Management quarterly report.

The motion passed on a unanimous voice vote. Ayes: Fennell, Glaser, Miller, Smith, Wilson, Winkler. Noes: None. Absent: Allison, Daugherty. Abstentions: Woo (non-voting).

7.3. Customer Rate Setting

Executive Director Marshall reported that PG&E's rate setting is delayed until March. Staff recommended adopting rates as other CCAs do, by selecting a fixed discount percentage from PG&E's rate. PG&E's average generation rates are expected to decrease.

The directors discussed: the difficulty of achieving 100% renewable energy if PG&E lowers their rates as RCEA's base energy costs are locked in; the desire to increase green energy portfolio content; the community's expressed desire for rate discounts; possible switching to cost-of-service pricing in the future; and the possibility that more people will opt-out given the required 60-day notification period.

The directors further discussed: the need to increase RCEA's financial reserves; that about 1% of RCEA customers have opted up to 100% renewable energy; the risks of committing to

power purchasing agreements before knowing PG&E's rates; and the very small (less than $1) average bill difference between a 1% and 1.5% discount rate. The directors requested public education to focus on why rate discounts are changing, the increasing transmission costs, and available programs to reduce bills and increase energy efficiency. Director Glaser expressed support for Jeff Fuller's 1.5% rate discount recommendation.

Chair Winkler invited public comment. An unidentified member of the public stated that the small bill reductions make little difference to individual customers but make a big difference in RCEA's ability to create renewable energy projects that people want.

Member of the public Ellen Golla stated that she manages a Facebook page with 700 likes and many people are against biomass energy and want clean energy. Many of these community members work during the day, she stated, and cannot testify at meetings.

Chair Winkler closed public comment.

M/S: Miller, Smith: Approve 2019 RCEA customer electricity rates at 1% below PG&E generation rates, inclusive of all PG&E charges to CCA customers.

The motion passed. Ayes: Fennell, Miller, Smith, Wilson, Winkler. Noes: Glaser. Absent: Allison, Daugherty. Abstentions: Woo (non-voting).

7.4 Renewable Energy Request for Proposals

Executive Director Marshall presented request for proposal documents for potential local and regional renewable energy producers. The CCE program is seeking to enter 10-year minimum duration contracts with wind, solar and small-hydro projects located within a two-county radius of Humboldt County.

The directors discussed the method for selecting review panel members, the balance of expertise on the review panel, the potential for future rounds of proposal solicitation and the Board's role in guiding local resource development. The directors also discussed the possibility of lowering the minimum solar project size to 1 MW so projects don't fall through a gap between RCEA's upcoming feed-in tariff and renewable energy procurement programs.

It was clarified that final project selection will be made by the Board directors, that applicants would be responsible for project permitting, and that RCEA would be a power purchaser and not a partner on these projects.

Chair Winkler invited public comment. Member of the public and GHD civil engineer Jordan King supported a smaller minimum size solar project to increase local participation.

Chair Winkler closed public comment.

M/S: Fennell, Miller: Authorize staff to issue the RCEA 2019 Renewable Energy Request for Proposals subject to final review by general counsel and lowering the minimum contract capacity for solar projects to 1 MW, and approve membership for the request for proposals review team.

The motion passed on a unanimous voice vote. Ayes: Fennell, Glaser, Miller, Smith, Wilson, Winkler. Noes: None. Absent: Allison, Daugherty. Abstentions: Woo (non-voting).

7.5 DG Fairhaven Contract Renewal

Director Woo recused herself because of a remote conflict of interest. DG Fairhaven is a client of Director Woo's employer, SHN. Director Woo is also an SHN shareholder, although the Board's decision will not affect SHN's share price. Director Woo does not supervise any SHN employee working on the DG Fairhaven project. Director Woo left the dais at 5:15 p.m.

Executive Director Marshall reported that RCEA is paying $65/MWh in its current 1-year DG Fairhaven agreement. Power Resources Director Engel negotiated a 1-year extension at $59/MWh without resource adequacy. While the agreement extension will reduce the agency's budget headroom, it helps meet 2019 Category 1 renewable resources requirements.

The directors discussed how RCEA procures resource adequacy; the desire for a presentation on non-CO2 producing wood waste use, the need to engage the community and experts on future CCE direction; and the importance of biomass in RCEA's energy mix as a local, renewable energy that also provides dispatchable, consistent baseload.

Chair Winkler invited public comment. An unidentified member of the public spoke against the agreement renewal, stating that it did not seem fiscally responsible as RCEA will lose money. The speaker added that as enough power had been procured for the year, power purchased from DG Fairhaven would need to be sold, which made no sense.

Member of the public Ellen Golla opposed the agreement extension, stating that ratepayers should not be responsible for subsidizing timber industry waste disposal. Many people would oppose lowering ratepayer savings while subsidizing expensive biomass, Ms. Golla stated.

Chair Winkler closed public comment.

M/S: Fennell, Wilson: Authorize the Executive Director to develop and execute, after review and approval by the RCEA General Counsel, an amendment to the power purchase agreement with DG Fairhaven Power LLC renewing the agreement for a 12-month period beginning March 1, 2019, and any other associated documents as necessary.

The motion passed on a unanimous voice vote. Ayes: Fennell, Glaser, Miller, Smith, Wilson, Winkler. Noes: None. Absent: Allison, Daugherty. Abstentions: Woo (non-voting and recused).

END OF COMMUNITY CHOICE ENERGY (CCE) BUSINESS

The Board adjourned for a break at 5:27 p.m. Director Woo returned to dais and the Board reconvened at 5:35 p.m.

CLOSED SESSION

Chair Winkler invited public comment on the closed session item. No one came forward to speak. Chair Winkler closed public comment.

The RCEA Board convened in closed session at 5:35 p.m. to consider the following items:

11.1 Public Employee Performance Evaluation, pursuant to Government Code Section 54957(b)(1): Executive Director

11.2 Conference with labor negotiator pursuant to Government Code Section 54957.6:
RCEA representative: Director Sheri Woo.
Unrepresented employee: Executive Director

The Board reconvened to open session at 7:23 p.m.

Director Woo stated there was nothing to report out, and that discussion of this item would be continued to the February 28, 2019 meeting.

ADJOURNMENT

Chair Winkler adjourned the meeting at 7:24 p.m.

Respectfully Submitted,

Lori Taketa
Clerk of the Board

DRAFT

Redwood Coast Energy Authority
Disbursements Report
As of December 31, 2018

Accrual Basis

Type	Date	Num	Name	Memo	Amount
Check	12/01/2018	9004	CoPower	Premium	0.00
Liability Check	12/07/2018	E-pay	EDD	499-0864-3 QB Tracking # -351076378	-3,670.76
Liability Check	12/07/2018	E-pay	Internal Revenue Service	74-3104616 QB Tracking # -351059378	-17,867.30
Bill Pmt -Check	12/07/2018	9031	North Coast Co-op	Meals: Board Meeting	-99.00
Paycheck	12/10/2018	9030	Paycheck	Payroll: 11/15/18-11/30/18	-2,728.21
Bill Pmt -Check	12/10/2018	9032	ABC Office Equipment	November print charges/service contract.	-308.74
Bill Pmt -Check	12/10/2018	9033	Advanced Display & Signs	21 x 41 Poster	-16.73
Bill Pmt -Check	12/10/2018	9034	Arcata Chamber of Commerce	Dinner Ticket Sales	-60.00
Bill Pmt -Check	12/10/2018	9035	Arts & Drafts	Staff development venue	-75.00
Bill Pmt -Check	12/10/2018	9036	Bishop, M.	November mileage reimbursement	-37.01
Bill Pmt -Check	12/10/2018	9037	Burks, K.	September mileage reimbursement	-71.80
Bill Pmt -Check	12/10/2018	9038	CalCCA	Operational Member dues Q2 18-19	-22,390.00
Bill Pmt -Check	12/10/2018	9039	City of Arcata	November Utility User Tax	-7,493.52
Bill Pmt -Check	12/10/2018	9042	City of Blue Lake	November Utility User Tax	-360.54
Bill Pmt -Check	12/10/2018	9043	CSDA	2018 Membership Dues ID 26262	-1,377.00
Bill Pmt -Check	12/10/2018	9044	Diamond, Nancy	November Legal Services - CCA	-1,640.00
Bill Pmt -Check	12/10/2018	9045	Enterprise Tolls	Toll Fine: Rental agreement #3V63KW	-11.95
Bill Pmt -Check	12/10/2018	9046	Eureka Chamber of Commerce	2019 Membership Dues	-220.00
Bill Pmt -Check	12/10/2018	9047	Gwynn, J.	J. Gwynn travel: CalCCA Billing Operations Meeting	-71.95
Bill Pmt -Check	12/10/2018	9048	Headwaters Fund	RCEA loan November 2018 Interest 3846000 80019	-50,000.00
Bill Pmt -Check	12/10/2018	9049	Ichien, D.	November mileage reimbursement	-26.16
Bill Pmt -Check	12/10/2018	9051	Mission Uniform & Linen	Nov mat service, janitorial supplies	-6.74
Bill Pmt -Check	12/10/2018	9052	Morehead, M.	Supplies for Jefferson School event	-11.77
Bill Pmt -Check	12/10/2018	9053	North Coast Cleaning	November Cleaning Service	-402.00
Bill Pmt -Check	12/10/2018	9054	NYLEX.net, Inc.	Network services	-5,927.11
Bill Pmt -Check	12/10/2018	9055	Owen, P.	Mileage reimbursements	-123.18
Bill Pmt -Check	12/10/2018	9056	PG&E EV Account	EV stations October	-452.60
Bill Pmt -Check	12/10/2018	9057	PG&E Utility Account	October utilities/lighting upgrade financing	-884.11
Bill Pmt -Check	12/10/2018	9058	SDRMA Dental	September Premium	-1,354.81
Bill Pmt -Check	12/10/2018	9059	SDRMA Medical	September Premium	-21,201.72
Bill Pmt -Check	12/10/2018	9060	Slackerelli, M.	M. Slackerelli travel: CalCCA Customer Care Meetir	-23.00
Bill Pmt -Check	12/10/2018	9061	Solomon, J.	November mileage reimbursement	-26.27
Bill Pmt -Check	12/10/2018	9062	Suddenlink Communications	Internet access	-1,106.20
Bill Pmt -Check	12/10/2018	9063	Times-Standard	Legal Notice: Notices Inviting Bids (Fortuna Elemen	-837.28
Bill Pmt -Check	12/10/2018	9064	Times Printing Company	Outside print services	-860.00
Bill Pmt -Check	12/10/2018	9067	City of Arcata	November High Energy Use Tax	-2,036.80
Bill Pmt -Check	12/10/2018	9069	Environmental Indicator Accounting Srvcs.	Professional Services	-3,230.00
Bill Pmt -Check	12/10/2018	9070	Morse Media	Hosting Services	-97.20
Paycheck	12/10/2018	121001	Direct Deposit	Payroll: 11/15/18-11/30/18	-44,184.02
Check	12/11/2018	9065	EUC Assessment:Liz Larsen	EUC project completion rebate	-500.00
Check	12/11/2018	9066	EUC Assessment:Chris Freeman	EUC project completion rebate	-500.00
Paycheck	12/11/2018	9068	Paycheck	Final	-10,765.05
Liability Check	12/12/2018	E-pay	EDD	499-0864-3 QB Tracking # -1269293478	-1,582.43
Liability Check	12/12/2018	E-pay	Internal Revenue Service	74-3104616 QB Tracking # -1269266478	-5,891.22
Check	12/14/2018	9072	NEM Customers	NEM Cash Outs	-2,324.50
Bill Pmt -Check	12/15/2018	ACH	The Energy Authority	TEA Invoice #20181215	-1,556,663.36
Bill Pmt -Check	12/20/2018	AC H	Humboldt Redwood Company	Humboldt Redwood CO. November 2018	-733,355.87
Bill Pmt -Check	12/20/2018	ACH	CalPine Corporation	Calpine November 2018 Costs	-72,568.45
Bill Pmt -Check	12/20/2018	ACH	DG Fairhaven	DG Fairhaven November 2018	-611,638.15
Liability Check	12/21/2018	E-pay	EDD	499-0864-3 QB Tracking # -1126108478	-3,629.63
Liability Check	12/21/2018	E-pay	Internal Revenue Service	74-3104616 QB Tracking # -1126091478	-18,156.06
Check	12/21/2018	9087	EUC Assessment:Rebecca Hubbard	EUC project completion rebate	-500.00
Bill Pmt -Check	12/21/2018	9090	Winzler, John	Office Lease - January	-4,350.00
Check	12/21/2018	9091	EUC Assessment:Lena Means	EUC project completion rebate	-500.00
Bill Pmt -Check	12/21/2018	9092	ARBCo Construction	Remodel - South East Office	-3,978.19
Bill Pmt -Check	12/21/2018	9093	Avcollie, M.	November mileage reimbursement.	-11.99
Bill Pmt -Check	12/21/2018	9094	Bicoastal Media, LLC	Community Outreach Advertising	-495.00
Bill Pmt -Check	12/21/2018	9095	Biondini, L.	September travel reimbursement	-153.83

Type	Date	Num	Name	Memo	Amount
Bill Pmt -Check	12/21/2018	9096	Bithell, M.	Purchase reimbursement: Office Supplies	-18.43
Bill Pmt -Check	12/21/2018	9097	California Body Shop, Inc.	CA Body Shop self-install rebate/Audit 5533.	-630.00
Bill Pmt -Check	12/21/2018	9098	Campbell, A.	Tavel reimbursements	-100.57
Bill Pmt -Check	12/21/2018	9099	City of Eureka-Water	Water service, 10/25-11/26/18	-155.96
Bill Pmt -Check	12/21/2018	9100	Crestmark Architectural Millworks	Crestmark self-install rebate/Audit 5569	-209.92
Bill Pmt -Check	12/21/2018	9101	Cyndy Day-Wilson, Esq.	Legal services	-3,995.89
Bill Pmt -Check	12/21/2018	9102	David L. Moonie & Co., LLP	Contract fee- audit for 16/17	-7,975.00
Bill Pmt -Check	12/21/2018	9103	Donald Dame	Professional Services	-290.50
Bill Pmt -Check	12/21/2018	9104	FedEx	Residential Kit Shipping	-49.93
Bill Pmt -Check	12/21/2018	9105	Greenview Market	Greenview Market self-install rebate/Audit 5605	-465.40
Bill Pmt -Check	12/21/2018	9106	HSU Fdn FCEV ARV-14-055	October contract services 000163/SP33439	-221.60
Bill Pmt -Check	12/21/2018	9107	Humboldt Lock & Safe	Duplicate keys	-152.04
Bill Pmt -Check	12/21/2018	9108	Local Government Commission	CivicSpark 18-19 Program	-2,550.00
Bill Pmt -Check	12/21/2018	9109	Marshall, M.	November travel reimbursement	-146.63
Bill Pmt -Check	12/21/2018	9110	McKeever Energy & Electric, Inc.	BLM - Dept of Interior	-558.00
Bill Pmt -Check	12/21/2018	9111	Mission Uniform & Linen	Janitorial supplies	-168.77
Bill Pmt -Check	12/21/2018	9112	NYLEX.net, Inc.	Onsite network support services - Jan 2019	-3,200.00
Bill Pmt -Check	12/21/2018	9113	PG&E CCA	November CCE Charges	-21,787.15
Bill Pmt -Check	12/21/2018	9114	Pierson's Home Ctr	Home upgrade materials	-14.09
Bill Pmt -Check	12/21/2018	9115	Recology	November garbage service	-90.72
Bill Pmt -Check	12/21/2018	9116	SDRMA Medical	January Premium	-20,954.88
Bill Pmt -Check	12/21/2018	9117	Shasta Regional Transportation Agency	FCEV project outreach	-844.18
Bill Pmt -Check	12/21/2018	9118	Solomon, J.	Purchase reimbursement: office supplies	-9.75
Bill Pmt -Check	12/21/2018	9119	Sonoma County Office of Education	October 2018 Professional Services.	-442.00
Bill Pmt -Check	12/21/2018	9120	Times Printing Company	Miscellaneous printing services	-832.30
Bill Pmt -Check	12/21/2018	9121	Verizon Wireless	November tablet/cell service for field staff/mobile br	-228.86
Paycheck	12/21/2018	9122	Paycheck	Payroll: 12/1/18-12/15/18	-2,728.21
Paycheck	12/21/2018	9123	Direct Deposit	Payroll: 12/1/18-12/15/18	-46,148.48
Bill Pmt -Check	12/31/2018	9124	Chapman, R.	December mileage reimbursement	-72.54
Paycheck	12/31/2018	9125	Paycheck	Payroll: 12/1/18-12/15/18	-1,023.08
TOTAL					**-3,334,919.09**

Redwood Coast Energy Authority
Balance Sheet
As of November 30, 2018

	Nov 30, 18
ASSETS	
Current Assets	
Checking/Savings	
1010 · Petty Cash	414.35
1050 · GRANTS & DONATIONS 3840	15,204.58
1060 · Umpqua Checking-9271	-105,979.30
1070 · Umpqua Deposit Cntrl Acct 1687	3,792,508.19
1075 · Umpqua Reserve Account 2300	4,000,000.00
8413 · COUNTY TREASURY 3839	5,065.52
Total Checking/Savings	7,707,213.34
Total Accounts Receivable	377,893.48
Other Current Assets	
1101 · Allowance for Doubtful Accounts	-219,198.54
1103 · Accounts Receivable-Other	4,982,818.19
1120 · Inventory Asset	21,715.00
1202 · Prepaid Expenses	-21,454.74
Total 1210 · Retentions Receivable	48,218.53
1499 · Undeposited Funds	486.25
Total Other Current Assets	4,812,584.69
Total Current Assets	12,897,691.51
Total Fixed Assets	151,725.39
Total Other Assets	4,100.00
TOTAL ASSETS	**13,053,516.90**
LIABILITIES & EQUITY	
Liabilities	
Current Liabilities	
Total Accounts Payable	1,723,074.72
Total Credit Cards	-1,578.34
Other Current Liabilities	
2001 · Accounts Payable-Other	522,118.36
Total 2100 · Payroll Liabilities	120,871.61
Total 2210 · Retentions Payable	4,258.76
Total Other Current Liabilities	647,248.73
Total Current Liabilities	2,368,745.11
Total Long Term Liabilities	364,769.71
Total Liabilities	2,733,514.82
Equity	
2320 · Investment in Capital Assets	147,113.19
3200 · LTD - Headwaters Loan	-172,960.21
3203 · LTD - TEA Phase I & II	-196,338.81
3900 · Fund Balance	8,537,379.95
Net Income	2,004,807.96
Total Equity	10,320,002.08
TOTAL LIABILITIES & EQUITY	**13,053,516.90**

Redwood Coast Energy Authority
Profit & Loss Budget vs. Actual
July through December 2018

	Jul - Dec 18	Budget	% of Budget
Ordinary Income/Expense			
Income			
5 REVENUE EARNED			
Total 5000 · Revenue - government agencies	50,584.34	111,600.00	45.33%
Total 5100 · Revenue - program related sales	8,296.09	18,000.00	46.09%
Total 5400 · Revenue-nongovernment agencies	587,205.43	1,210,000.00	48.53%
5500 · Revenue - Electricity Sales			
Total 5510 · Electricity Sales	23,746,322.15	51,940,000.00	45.72%
5580 · Uncollectable Accounts	-71,264.00	-160,000.00	44.54%
Total 5500 · Revenue - Electricity Sales	23,675,058.15	51,780,000.00	45.72%
Total 5 REVENUE EARNED	24,326,144.01	53,119,600.00	45.8%
Total Income	24,326,144.01	53,119,600.00	45.8%
Expense			
Total 6 WHOLESALE POWER SUPPLY	16,614,594.08	39,880,000.00	41.66%
Total 7 PERSONNEL EXPENSES	1,160,343.78	2,253,700.00	51.49%
Total 8.1 FACILITIES AND OPERATIONS	136,160.97	211,400.00	64.41%
Total 8.2 COMMUNICATIONS AND OUTREACH	59,014.46	108,200.00	54.54%
Total 8.3 TRAVEL AND MEETINGS	22,837.06	48,000.00	47.58%
8.4 PROFESSIONAL & PROGRAM SRVS			
8400 · Regulatory	33,585.00	94,600.00	35.5%
8410 · Contracts - Program Related Ser	68,173.10	427,200.00	15.96%
8420 · Accounting	17,500.00	55,000.00	31.82%
8430 · Legal	94,049.47	85,000.00	110.65%
8450 · Wholesale Services - TEA	242,477.45	585,000.00	41.45%
8460 · Procurement Credit - TEA	273,866.92	800,000.00	34.23%
8470 · Data Management - Calpine	509,130.30	1,100,000.00	46.29%
Total 8.4 PROFESSIONAL & PROGRAM SRVS	1,238,782.24	3,146,800.00	39.37%
Total 8.5 PROGRAM EXPENSES	339,168.60	1,268,000.00	26.75%
Total 8.6 INCENTIVES & REBATES	236,423.84	460,000.00	51.4%
Total 9 NON OPERATING COSTS	315,005.03	565,800.00	55.67%
Total Expense	20,122,330.06	47,941,900.00	41.97%
Net Ordinary Income	4,203,813.95	5,177,700.00	81.19%
Reserve Contributions	2,500,000.00	3,000,000.00	83.33%
Net Income	**1,703,813.95**	**2,177,700.00**	**78.24%**

REDWOOD COAST EnergyAuthority

STAFF REPORT

Agenda Item # 6.4

AGENDA DATE:	February 22, 2019
TO:	Board of Directors
PREPARED BY:	Allison Campbell, Manager of Power Resources
SUBJECT:	Power Source Disclosure Annual Audit

SUMMARY

Under State law (Public Utilities Code Sections 398.4 and 398.5, initiated by Senate Bill 1305), retail suppliers of electricity must annually disclose fuel source information to consumers about the electricity being sold, using a format developed by the California Energy Commission (CEC). The intent of this report is to educate customers through the disclosure of accurate, reliable, and simple to understand information regarding the generation attributes of the energy delivered by their service provider. The Redwood Coast Energy Authority is required to submit its Power Source Disclosure (PSD) Annual Report to the CEC by June 1st of each year. The information contained in this Annual Report is used to prepare the Power Content Label, which is mailed to CCA customers of RCEA before October of each year and posted on RCEA's website at https://redwoodenergy.org/wp-content/uploads/2018/08/2017_PCL_RCEA.pdf and on the CEC's website at http://www.energy.ca.gov/pcl/labels/

In 2017, the CEC regulation[1] implementing SB 1305 was updated and the changes became effective retroactively in October 2016. The changes included a provision that requires utilities to engage a third-party certified public accountant to perform an audit to verify the specific purchases, resales, and self-consumption of energy by fuel type.[2]

RCEA staff submitted the PSD Annual Report for 2017 to the CEC in May 2018, along with the associated attestation form. The 2017 PCL was mailed to each electric customer in September 2018, in accordance with the regulation. Staff engaged a third-party certified public accountant, Matthew Brinker of Pisenti and Brinker, to perform an audit of the two products offered to customers, REpower and REpower+.

FINANCIAL IMPACT

The cost incurred to RCEA for a Certified Public Accountant to produce the PSD Audit was $6,000.

[1] "Power Source Disclosure Program Regulations," California Energy Commission, CEC-300-2017-048, October 2016. http://docketpublic.energy.ca.gov/PublicDocuments/14-OIR-01/TN216978_20170412T103905_Power_Source_Disclosure_Program_Amended_Regulations.pdf.

[2] California Code of Regulations Title 20, Section 1394(b)(1).

STAFF RECOMMENDATION

Receive the 2017 Power Source Disclosure Audit.

ATTACHMENTS:

1. Independent audit of 2017 Redwood Coast Energy Authority Power Source Disclosure

Redwood Coast Energy Authority
Power Source Disclosure Program

Report on Applying Agreed-upon Procedures

For the year ended December 31, 2017

PISENTI & BRINKER LLP
Certified Public Accountants & Advisors

3562 Round Barn Circle, Suite 300
Santa Rosa, CA 95403
(707) 542-3343 · Office
(707) 527-5608 · Fax
pbllp.com

Independent Accountant's Report on Applying Agreed-upon Procedures

Board of Directors
Redwood Coast Energy Authority
Eureka, California

We have performed the procedures enumerated in Attachment I and Attachment II to Redwood Coast Energy Authority's ("RCEA") Power Source Disclosure Program Annual Report and Power Content Label for the REpower and REpower+ products, respectively, for the year ended December 31, 2017. These procedures, which are required by the California Energy Commission in accordance with *Section 1394(b)(1) of Title 20 of the California Code and Regulations, Article 5, Electricity Generation Source Disclosure (the "Power Source Disclosure Program Regulations")*, were performed solely to assist RCEA to comply with the Power Source Disclosure Program Regulations. RCEA is responsible for the Power Source Disclosure Program Annual Reports and Power Content Label. The sufficiency of these procedures is solely the responsibility of the parties specified in this report. Consequently, we make no representation regarding the sufficiency of the procedures enumerated in the attachments either for the purpose for which this report has been requested or for any other purpose.

This agreed-upon procedures engagement was conducted in accordance with attestation standards established by the American Institute of Certified Public Accountants. We were not engaged to and did not conduct an examination or review, the objective of which would be the expression of an opinion or conclusion, respectively, on RCEA's Power Source Disclosure Program Annual Report and Power Content Label for the REpower and REpower+ products for the year ended December 31, 2017. Accordingly, we do not express such an opinion or conclusion. Had we performed additional procedures, other matters might have come to our attention that would have been reported to you.

This report is intended solely for the information and use of the management of RCEA and the California Energy Commission and is not intended to be, and should not be, used by anyone other than these specified parties.

Pisenti & Brinker LLP

Santa Rosa, California
December 10, 2018

RSM US Alliance member firms are separate and independent businesses and legal entities that are responsible for their own acts and omissions, and each are separate and independent from RSM US LLP. RSM US LLP is the U.S. member firm of RSM International, a global network of independent audit, tax, and consulting firms. Members of RSM US Alliance have access to RSM International resources through RSM US LLP but are not member firms of RSM International.

December 10, 2018

Attachment I – REpower
Page 1

Independent Accountant's Report on Applying Agreed-upon Procedures for the year ended December 31, 2017

Purchases – Pisenti & Brinker reviewed the information used to prepare Schedule 1: Power Procurements and Retail Sales and Schedule 2: Annual Power Content Label Calculation for the REpower product and performed the procedures identified below.

A. For specific purchases by facility name, traced and agreed facility name, facility number provided by EIA or WREGIS, fuel type, and kilowatt hours from the power purchase agreement and/or WREGIS reports to Schedule 1. Agreed the purchases of unspecified sources of power from the CAISO report to Schedule 1. No resales/self-consumption was reported on Schedule 1. Tested the mathematical accuracy of Schedule 1.

B. Tested 100 percent of purchases from the information used to prepare Schedule 1 in accordance with the sampling guidelines discussed in subdivision (b)(2) of Appendix A of the Power Source Disclosure Program Regulations, and for each purchase performed the following procedures:

    1. Agreed the facility name and number provided by EIA or WREGIS, kilowatt hours, and the fuel type from the invoice to the information used to prepare Schedule 1.

    2. No facilities owned by retail supplier were used.

    3. Agreed date of generation on the invoice to the reporting period reflected on the information used to prepare Schedule 1.

C. Agreed net kilowatt hours purchased reported on Schedule 1 to net purchases shown on Schedule 2.

Findings:
No exceptions were noted.

Sales - Pisenti & Brinker reviewed the information used to prepare Schedule 1: Power Procurements and Retail Sales and Schedule 2: Annual Power Content Label Calculation for the REpower product and performed the procedures identified below.

A. Agreed the total retail sales information used to prepare Schedule 1 to total retail sales shown on Schedule 1.

B. Agreed total retail sales shown on Schedule 1 to total retail sales shown on Schedule 2. Confirmed the mathematical accuracy of Schedule 2.

Findings:
No exceptions were noted.

Independent Accountant's Report on Applying Agreed-upon Procedures for the year ended December 31, 2017

Labels – Pisenti & Brinker obtained the REpower product's annual power content label for 2017 and performed the procedure identified below.

A. Calculated the fuel and technology mix of the total annual retail sales for the product using information provided in Schedule 2 and the equation found in subdivision (a)(2)(A)(2) of Section 1394 of the Power Source Disclosure Program Regulations and compared these percentages to those identified for the actual power mix on the annual label.

Findings:
No exceptions were noted.

Pools – Not applicable as power was not sold into the power pool or purchased out of the power pool.

December 10, 2018

Attachment II – REpower+
Page 1

Independent Accountant's Report on Applying Agreed-upon Procedures for the year ended December 31, 2017

Purchases – Pisenti & Brinker reviewed the information used to prepare Schedule 1: Power Procurements and Retail Sales and Schedule 2: Annual Power Content Label Calculation for the REpower+ product and performed the procedures identified below.

A. For specific purchases by facility name, traced and agreed facility name, facility number provided by the WREGIS certificate number, fuel type, and kilowatt hours from WREGIS reports to Schedule 1. No purchases of unspecified sources of power or resales/self-consumption were reported on Schedule 1. Tested the mathematical accuracy of Schedule 1.

B. Tested 100 percent of purchases from the information used to prepare Schedule 1 in accordance with the sampling guidelines discussed in subdivision (b)(2) of Appendix A of the Power Source Disclosure Program Regulations, and for each purchase performed the following procedures:

    1. Agreed the facility name and number from WREGIS, kilowatt hours, and the fuel type from the invoice to the information used to prepare Schedule 1.

    2. No facilities owned by retail supplier were used.

    3. Agreed date of generation on the invoice to the period reflected on the information used to prepare Schedule 1.

C. Agreed net kilowatt hours purchased reported on Schedule 1 to net purchases shown on Schedule 2.

Findings:
No exceptions were noted.

Sales - Pisenti & Brinker reviewed the information used to prepare Schedule 1: Power Procurements and Retail Sales and Schedule 2: Annual Power Content Label Calculation for the REpower+ product and performed the procedures identified below.

A. Agreed the total retail sales information used to prepare Schedule 1 to total retail sales shown on Schedule 1.

B. Agreed total retail sales shown on Schedule 1 to total retail sales shown on Schedule 2. Confirmed the mathematical accuracy of Schedule 2.

Findings:
No exceptions were noted.

Independent Accountant's Report on Applying Agreed-upon Procedures for the year ended December 31, 2017

Labels – Pisenti & Brinker obtained the REpower+ product's annual power content label for 2017 and performed the procedure identified below.

A. Calculated the fuel and technology mix of the total annual retail sales for the product using information provided in Schedule 2 and the equation found in subdivision (a)(2)(A)(2) of Section 1394 of the Power Source Disclosure Program Regulations and compared these percentages to those identified for the actual power mix on the annual label.

Findings:
No exceptions were noted.

Pools – Not applicable as power was not sold into the power pool or purchased out of the power pool.

REDWOOD COAST EnergyAuthority

STAFF REPORT
Agenda Item # 6.5

AGENDA DATE:	February 28, 2019
TO:	Board of Directors
PREPARED BY:	Nancy Diamond, General Counsel
SUBJECT:	Employment Contract, Executive Director

BACKGROUND

The Executive Director's Employment Agreement expires on February 28, 2019. Amendment No. 4 proposes to extend the contract for 5 years. No other changes are proposed in this Amendment.

STAFF RECOMMENDATION

Approve Amendment No. 4 to Agreement for Employment of Executive Director with Matthew Marshall.

ATTACHMENTS:

Amendment No. 4 to Agreement for Employment with Executive Director.

AMENDMENT No. 4 TO
AGREEMENT FOR EMPLOYMENT
OF EXECUTIVE DIRECTOR

This is an amendment ("Amendment") to that certain agreement by and between the Redwood Coast Energy Authority ("RCEA") and Matthew Marshall ("Employee"), entitled *Agreement for Employment of Executive Director*, effective November 15, 2010, and first amended by Addendum on November 15, 2012, and further amended on November 15, 2015, February 1, 2017, and February 1, 2018. The initial 2010 Agreement, 2012 Addendum, 2015 Amendment, 2017 Amendment, and 2018 Amendment are collectively referred to herein as the "Agreement." This Amendment No. 4 is effective February 28, 2019.

RECITALS

WHEREAS, Employee has acted in the capacity of Executive Director for RCEA since November 15, 2010 pursuant to an employment agreement which was extended through February 2019; and

WHEREAS, the Board of the RCEA and Employee desire to extend Employee's employment as Executive Director for an additional five-year term on the same terms and conditions except as set forth below.

NOW THEREFORE, in consideration of the mutual covenants, conditions and terms recited herein and made a material part hereof, the parties agree as follows:

1. **Term of Agreement (Employment Agreement, Section 2 – EXTENDED).** The term of this Agreement, unless terminated earlier as provided in this Agreement, shall be extended for five (5) years, expiring on March 1, 2024.

2. **Ratification of Agreement**. The terms and conditions of the Agreement, including all exhibits and attachments, are ratified in their entirety except to the extent inconsistent with the terms and provisions of this Amendment. In the event of such inconsistency, this Amendment No. 3 shall control.

IN WITNESS WHEREOF, Employer has caused this Amendment No. 3 to be signed and executed on its behalf by its Chair, and the Employee has executed this Agreement as of the day and year first above written.

AUTHORITY	**EXECUTIVE DIRECTOR**
_____	_____
Michael Winkler, Chair of RCEA Board	Matthew Marshall
Dated: _____	Dated: _____

Approved As to Form:

_____
Nancy Diamond, RCEA General Counsel

Dated: _____

Materials Received After Packet Publication

CORRECTED

AMENDMENT No. 4 TO AGREEMENT FOR EMPLOYMENT OF EXECUTIVE DIRECTOR

This is an amendment ("Amendment") to that certain agreement by and between the Redwood Coast Energy Authority ("RCEA") and Matthew Marshall ("Employee"), entitled *Agreement for Employment of Executive Director*, effective November 15, 2010, and first amended by Addendum on November 15, 2012, and further amended on November 15, 2015, February 1, 2017, and February 1, 2018. The initial 2010 Agreement, 2012 Addendum, 2015 Amendment, 2017 Amendment, and 2018 Amendment are collectively referred to herein as the "Agreement." This Amendment No. 4 is effective February 28, 2019.

RECITALS

WHEREAS, Employee has acted in the capacity of Executive Director for RCEA since November 15, 2010 pursuant to an employment agreement which was extended through February 2019; and

WHEREAS, the Board of the RCEA and Employee desire to extend Employee's employment as Executive Director for an additional five-year term on the same terms and conditions except as set forth below.

NOW THEREFORE, in consideration of the mutual covenants, conditions and terms recited herein and made a material part hereof, the parties agree as follows:

1. **Term of Agreement (Employment Agreement, Section 2 – EXTENDED).** The term of this Agreement, unless terminated earlier as provided in this Agreement, shall be extended for five (5) years, expiring on March 1, 2024.

2. **Ratification of Agreement**. The terms and conditions of the Agreement, including all exhibits and attachments, are ratified in their entirety except to the extent inconsistent with the terms and provisions of this Amendment. In the event of such inconsistency, this Amendment No. 4 shall control.

IN WITNESS WHEREOF, Employer has caused this Amendment No. 4 to be signed and executed on its behalf by its Chair, and the Employee has executed this Agreement as of the day and year first above written.

AUTHORITY	**EXECUTIVE DIRECTOR**
_____	_____
Michael Winkler, Chair of RCEA Board	Matthew Marshall
Dated: _____	Dated: _____

Approved As to Form:

_____

Nancy Diamond, RCEA General Counsel

Dated: _____

REDWOOD COAST EnergyAuthority

STAFF REPORT
Agenda Item # 6.6

AGENDA DATE:	February 28, 2019
TO:	Board of Directors
PREPARED BY:	Richard Engel, Director of Power Resources
SUBJECT:	Amendment to Humboldt Sawmill Company Power Purchase Agreement

SUMMARY

At its December 2018 meeting, the Board authorized the Executive Director to execute an amendment to RCEA's existing power purchase agreement (PPA) with Humboldt Sawmill Company (HSC). The amendment would extend the PPA from its current 2022 end date until 2024 and reduce the price paid per MWh. After the Board gave its authorization, HSC proposed some further changes to the amendment. RCEA staff, consultants, and counsel reviewed these changes and have negotiated further adjustments deemed acceptable by HSC. Staff and counsel believe these changes should be acceptable to RCEA, but given that the changes go somewhat beyond what the Board previously authorized, we provide this opportunity for additional review and approval by the Board. These changes include:

- Language added to provide that any future amendments made as a result of a forecast PG&E rate adjustment that triggers the Material Change clause will not become effective until the rate adjustment is actually implemented, and only if the rate adjustment as implemented is found to meet the Material Change definition.
- Use of the California Consumer Price Index (CPI) rather than the national CPI in adjusting the price paid per MWh starting in 2021.
- Existing language in the PPA regarding Seller Excuse Hours and Buyer Excuses replaces "failure to perform" with "failure to perform a material obligation."
- Existing language in the PPA regarding modification of the plant or change in ownership adds a provision that RCEA's consent to any such changes "shall not be unreasonably withheld or delayed."
- The parties to the PPA recognize HSC's plant's status as a Qualifying Facility under the Public Utilities Policy Act of 1978 (PURPA).

FINANCIAL IMPACTS

The amendment would reduce RCEA's procurement costs of HSC biomass power by approximately $1.7 million during the remainder of 2019, and approximately $1.9 million per year in subsequent years, compared with the existing HSC contract price. Beginning in 2021, these savings may be reduced by an unknown amount, due to the provision for CPI

adjustment previously authorized by the Board. Annual volume of energy procured would remain the same as under the existing contract.

It is important to note that the material change provision of the contract would remain in place, so should future circumstances result in the contract straining the viability of meeting other program objectives, RCEA still retains the right to renegotiate the terms.

RECOMMENDED ACTION

Authorize the Executive Director to execute an amendment to the power purchase agreement with Humboldt Sawmill Company with the following key contract adjustments:

- Extend contract end date to 2024.
- Reduce unit price for the period March 1, 2019-December 31, 2019 to $65/MWh, thereafter increasing to a price of $67/MWh, subject to an annual consumer price index adjustment beginning on the anniversary of the contract amendment in 2021.

ATTACHMENT

Amendment No. 1 to Power Purchase Agreement (Humboldt Sawmill Company)

AMENDMENT No. 1 TO
POWER PURCHASE AGREEMENT
(Humboldt Sawmill Company)

This is an amendment ("Amendment") to that certain Power Purchase Agreement ("PPA") made by and between the Redwood Coast Energy Authority ("Buyer") and Humboldt Redwood Company, LLC ("HRC") on April 27, 2017, assigned by HRC to and assumed by Humboldt Sawmill Company ("HSC" and "Seller") on June 30, 2018. This Amendment is effective on March 1, 2019.

RECITALS

WHEREAS, pursuant to Section 2.6 of the PPA, "Material Change," the parties negotiated a price reduction in the PPA contract price and now seek to amend the PPA to reflect the changed terms, as well as make other mutually acceptable amendments to the PPA.

NOW THEREFORE, in consideration of the mutual covenants, conditions and terms recited herein and made a material part hereof, the parties agree as follows:

1. **Contract Price**. The PPA **Contract Price** is hereby amended to $65/MWh for the period March 1, 2019-December 31, 2019, and $67/MWh/year for the remainder of the term, subject to the Annual Contract Price Adjustment, as described below.

2. **Delivery Term**. The PPA **Delivery Term** is hereby amended to expire at 11:59 pm on February 29, 2024.

3. **Cover Sheet**. The PPA **Cover Sheet** is hereby replaced in its entirety by "Power Purchase Agreement, Cover Sheet - Amended March 1, 2019," attached hereto as Exhibit A and incorporated herein to reflect the changes in the Contract Price and Delivery Term.

4. **Annual Contract Price Adjustment**.

   a. **NEW: Article One: General Definitions** is hereby amended to add as Section 1.4.5 a definition for "Annual Contract Price Adjustment" as follows:

      "1.4.5 'Annual Contract Price Adjustment' has the meaning set forth in Section C of the Power Purchase Agreement, Cover Sheet - Amended March 1, 2019 and in Section 4.1(d)."

   b. **NEW: Article One: General Definitions** is hereby amended to add as Section 1.32.5 a definition for "Consumer Price Index" or "CPI" as follows:

      "1.32.5 'Consumer Price Index' or 'CPI' means the Consumer Price Index - California for All Urban Consumers, not seasonally adjusted, as published monthly by the California Department of Industrial Relations; or such other or similar index as Supplier reasonably selects to measure change in the purchasing power of the U.S. dollar in California, as approved in advance by RCEA."

   c. **NEW**: **Section 4.1, Price** is hereby amended to add as subsection (d) the "Annual Contract Price Adjustment" as follows:

DRAFT

"4.1 Price.

"(d) Annual Contract Price Adjustment. The Contract Price shall be increased annually, commencing on March 1, 2021, by the Annual Contract Price Adjustment, such that each year such Contract Price is equal to the prior year's Contract Price multiplied by the Annual Contract Price Adjustment. The Annual Contract Price Adjustment will be determined in 2021 as one (1) plus the percentage increase in the monthly CPI between January 2019 and January 2021. The Annual Contract Price Adjustment will be determined in each succeeding year as one (1) plus the percentage increase in the monthly CPI between January of the prior year and January of the year in which the adjustment is made. The Contract Price, if adjusted as aforesaid, shall remain unchanged until it is adjusted again pursuant to the terms of this Section."

5. Excuses.

a. **Section 1.208, Seller's Excuse Hours** is hereby replaced with the following:

"1.208 'Seller's Excuse Hours' means those hours during which Seller is unable to deliver Delivered Energy to Buyer as a result of (a) a Force Majeure event, (b) Buyer's failure to perform a material obligation under this Agreement, or (c) Curtailment Period."

b. **Section 3.1(i)(ii), Buyer's Excuses** is hereby replaced with the following:

"(ii) Buyer Excuses. Buyer shall be excused from (A) receiving and paying for the Product only (I) during periods of Force Majeure, (II) by Seller's failure to perform any material obligation under this Agreement, (III) during Curtailment Periods and (B) receiving Product during Buyer Curtailment Periods."

6. Material Change. Section 2.6, Material Change, is hereby replaced by the by the following:

"2.6 Material Change.

(a) A "Material Change" means any of the following:

(i) Buyer forecasts for the upcoming year that it is unable to meet both of the following program objectives:

(A) Offer competitive generation rates at least 3% lower than PG&E's, including adjustment for Non-Bypassable Charges, as filed by PG&E with the California Public Utilities Commission (CPUC) each calendar year; and

(B) Achieve a forecasted community choice energy program reserve accumulation of $2 million per year;

(I) The forecasted reserve accumulation calculation for any year will assume Buyer offers generation rates that are: (1) 3% lower than PG&E's after adjustments for Non-Bypassable Charges, and (2) are based on a portfolio that meets the minimum applicable federal, state, and local requirements, including the California Renewables Portfolio Standard and the requirements of California Public Utilities Code § 454.52. For avoidance of doubt, the forecasted reserve accumulation calculation for any year will not include new RCEA discretionary spending

DRAFT

commitments for above-market procurement of energy products beyond what is necessary to meet the applicable minimum federal, state, and local requirements. For purposes of this Section 2.6, the individual year procurement requirement of resources meeting the requirements of California Public Utilities Code § 399.16(b)(1) for the California Renewables Portfolio Standard shall be equal to RCEA's annual retail sales for the applicable year multiplied by the percentages specified in the following table:

Delivery Year	Renewable Portfolio Standard
2018	29%
2019	31%
2020	33%
2021	35.8%
2022	38.5%
2023	41.2%
2024	44%

(ii) Buyer experiences either of the following:

(A) cumulative opt-out exceeding 20% from program launch;

(B) incremental opt-out exceeding 10% for a calendar year beginning in 2018;

Opt-out will be measured on the basis of enrolled customer accounts vs. a baseline year of 2016. The opt-out calculation will use as a baseline the number of accounts that existed as of December 31, 2016, and will not include any Direct Access accounts.

(b) If a Material Change occurs, Buyer may provide notice to Seller and describe proposed terms and conditions for an amendment to this Agreement that would preserve or restore Buyer's ability to achieve the program objectives described in Section 2.6(a)(i) and (a)(ii) above. Within thirty (30) days of Buyer's notice, or such other time mutually agreed upon by the Parties, the Parties shall meet and attempt in good faith to negotiate such amendment. If the Parties are unable to agree upon such amendment within a reasonable period of time, as determined in good faith by Buyer, Buyer shall have the right to terminate this Agreement without further liability except with respect to payment of amounts accrued prior to termination. For avoidance of doubt, if Buyer terminates this Agreement pursuant to this Section 2.6, such termination shall not be an Event of Default and Buyer shall not be required to pay any Termination Payment.

(c) With the exception of this Amendment No. 1, no amendment to this Agreement that is based solely on a Material Change determination made pursuant to Section 2.6(a)(i) shall become effective prior to the effective date of any PG&E rate adjustment used by RCEA to forecast the Material Change, and shall become effective only provided that RCEA updates its financial forecast by incorporating the final PG&E rates for the then current year and establishes that a Material Change remains.

DRAFT

7. **<u>Seller's Guaranteed Energy Production Requirements</u>**. **Section 3.1**, **Seller's and Buyer's Obligations**, *Subsection (e)(ii)(D)* is hereby deleted.

8. **<u>Project Approvals</u>. Section 3.1, Seller's and Buyer's Obligations**, *Subsection (g)* is hereby replaced with the following:

"(g) <u>Project</u>.

(i) All Product provided by Seller pursuant to this Agreement shall be supplied from the Project only. Seller shall not make any alteration or modification to the Project which results in a material change to the Contract Capacity or the anticipated output of the Project without Buyer's written consent, which shall not be unreasonably withheld or delayed.

(ii) Seller shall not relinquish its possession or demonstrate exclusive right to control the Project without the prior written consent of Buyer, which shall not be unreasonably withheld or delayed, except under circumstances provided in Section 10.5."

9. **<u>Qualifying Facility</u>. Article Ten: Miscellaneous** is hereby amended to add as Section 10.15 a statement regarding Seller's Qualifying Facility (QF) Status, as follows**:**

"10.15. <u>QF Status</u>. The parties recognize and agree that Seller is currently a qualifying facility (QF) under the terms of the Public Utility Regulatory Policies Act of 1978 (PURPA) and that nothing herein impacts that status."

10. **<u>NEW: Definition addition, PG&E</u>. Article 1, Definitions** is hereby amended to add as Section 1.168.1 defining PG&E as follows:

"1.168.1 'PG&E' means Pacific Gas and Electric Company and PG&E Corporation, and their respective successors in interest.

11. **<u>Ratification of Agreement</u>**. The terms and conditions of the Agreement, including all exhibits and attachments, are ratified in their entirety except to the extent inconsistent with the terms and provisions of this Amendment. In the event of such inconsistency, this Amendment shall control.

IN WITNESS WHEREOF, the parties have executed this Amendment No.1 effective as of the date written above.

HUMBOLDT SAWMILL COMPANY, LLC:

By: _____ Date: _____
Name:
Title:

REDWOOD COAST ENERGY AUTHORITY:

By: _____ Date: _____
Name:
Title:

DRAFT

Approved as to form:

_____ Date: _____

Nancy Diamond, General Counsel

DRAFT

EXHIBIT "A"

Power Purchase Agreement, Cover Sheet - Amended March 1, 2019
(*attached*)

DRAFT

POWER PURCHASE AGREEMENT
COVER SHEET – AMENDED MARCH 1, 2019

This Power Purchase Agreement ("Agreement") is entered into between Redwood Coast Energy Authority, a California joint powers authority ("Buyer" or "RCEA"), and Humboldt Redwood Company, LLC, a Delaware limited liability company ("Seller"), as of April 27, 2017, the Execution Date. The information contained in this Cover Sheet shall be completed by Seller and incorporated into the Agreement.

A. Transaction Type

Seller may not modify the Transaction Type designated in this Part A of the Cover Sheet at any time after the Execution Date.

Product:

X As-Available, woody biomass facilities only
□ Baseload, woody biomass facilities only

Deliverability:

□ Energy Only Status

□ Partial Capacity Deliverability Status ("PCDS")

a) If PCDS is selected, provide the Expected PCDS Date, or the date the Project received a PCDS finding if already received: _____ (mm/dd/yyyy);

b) The Partial Capacity Deliverability Status Amount the Project will obtain is _____MW.

X Full Capacity Deliverability Status ("FCDS")

a) If FCDS is selected, provide the Expected FCDS Date, or the date the Project received a FCDS finding if already received: _____ (mm/dd/yyyy).

Seller shall elect one of the following types of transactions pursuant to Section 3.1(b) of the Agreement:

□ Full Buy/Sell
X Excess Sale

Seller shall elect one of the following Delivery Terms:

X Six Years

B. Contract Capacity and Expected Initial Energy Delivery Date

Contract Capacity: 17 MW

Expected Initial Energy Delivery Date: 3/1/2018

C. Contract Price

The Contract Price for each MWh of Product as measured by Delivered Energy in each Contract Year or Delivery Month and the price for Deemed Delivered Energy in each Contract Year or Delivery Month shall be as follows:

Delivery Period	Contract Price ($/MWh)	Surplus Delivered Energy Contract Price
Contract Year 1	83	Energy Price + Green Attribute Price
Contract Year 2	65 (March-December 2019); 67 (January-February 2020)	Energy Price + Green Attribute Price
Contract Year 3	67	Energy Price + Green Attribute Price
Contract Year 4	67 times Annual Contract Price Adjustment	Energy Price + Green Attribute Price
Contract Year 5	Contract Year 4 Contract Price times Annual Contract Price Adjustment	Energy Price + Green Attribute Price
Contract Year 6	Contract Year 5 Contract Price times Annual Contract Price Adjustment	Energy Price + Green Attribute Price

The Contract Price shall be increased annually, commencing on March 1, 2021, by the Annual Contract Price Adjustment, such that each year such Contract Price is equal to the prior year's Contract Price multiplied by the Annual Contract Price Adjustment. The "Annual Contract Price Adjustment" will be determined in 2021 as one (1) plus the percentage increase in the monthly CPI between January 2019 and January 2021. The "Annual Contract Price Adjustment" will be determined in each succeeding year as one (1) plus the percentage increase in the monthly CPI between January of the prior year and January of the year in which the adjustment is made. The Contract Price, if adjusted as aforesaid, shall remain unchanged until it is adjusted again pursuant to the terms of this Section.

"Consumer Price Index" or "CPI" means the Consumer Price Index - California for All Urban Consumers, not seasonally adjusted, as published monthly by the California Department of Industrial Relations; or such other or similar index as Supplier reasonably selects to measure change in the purchasing power of the U.S. dollar in California, as approved in advance by RCEA.

"Energy Price" means the weighted average CAISO price associated with Surplus Delivered Energy for each Delivery Month.

"Green Attribute Price" means the $14.50 per MWh payment for Green Attributes associated with Surplus Delivered Energy conveyed to Buyer in accordance with the terms of this Agreement.

DRAFT

D. Delivery Term Contract Quantity Schedule

Quantity of energy to be delivered by contract year:

Delivery Period	Contract Quantity (MWh)	Surplus Delivered Energy Quantity (MWh)
Contract Year 1	116,070	0
Contract Year 2	116,070	0
Contract Year 3	116,070	0
Contract Year 4	116,070	0
Contract Year 5	116,070	0
Contract Year 6	116,070	0

E. Collateral

- Pre-Development Term Security

  Dollar Amount: $1,530,000

  - Cash, or
  - Letter of Credit

- Delivery Term Security

  Dollar Amount: $1,900,000

  - Cash, or
  - Letter of Credit

F. Buyer Bid Curtailment and Buyer Curtailment Orders.

Operational characteristics of the Project for Buyer Bid Curtailment and Buyer Curtailment Orders are listed below. Buyer, as the Scheduling Coordinator or through its Third-Party Scheduling Coordinator, may request that CAISO modify the Master File for the Project to reflect the findings of a CAISO audit of the Project. In addition, Seller agrees to coordinate with Buyer or Third-Party SC, as applicable, to ensure all information provided to the CAISO regarding the operational and technical constraints in the Master File for the Project are accurate and are based on the true physical characteristics of the resource.

- PMax of the Project: 28.8 MW
- Minimum operating capacity: 0 MW
- Ramp Rate: 0.17 MW/Minute

DRAFT

- Maximum number of Start-ups per calendar day, month, year (if any such operational limitations exist): 1/month
- Advance notification required for Buyer Bid Curtailment and Buyer Curtailment Order: Not greater than the shortest Dispatch Interval in the Real-Time Market (as defined in the CAISO Tariff).

Other Requirements:

- Maximum number of hours annually for Buyer Curtailment Periods: zero hours
- The Project will be capable of receiving and responding to all Dispatch Instruction in accordance with Section 3.1(q).
- Start-Up Time (if applicable): NA*
- Minimum Run Time after Start-Up (if applicable): NA*
- Minimum Down Time after Shut-Down (if applicable): NA*
- *Generator: Continuously Operating biomass Unit

Note: Sellers should enter the maximum flexibility the Project can offer given the operational constraints of the technology.

G. Damage Payment (as described under Damage Payment definition in Section 1.47)

X Six Year Delivery Term. Dollar amount: $1,900,000

H. Notices List

BANKING AND PARTIES' CONTACT INFORMATION
REDACTED FOR PUBLIC VERSION

DRAFT

REDWOOD COAST EnergyAuthority

STAFF REPORT

Agenda Item # 8.1

AGENDA DATE:	February 28, 2019
TO:	Board of Directors
PREPARED BY:	Dana Boudreau, Acting Executive Director, for Matthew Marshall
SUBJECT:	Fiscal Year 2016-17 Independent Fiscal Auditor's Report

SUMMARY

David L. Moonie & Company, RCEA's independent fiscal auditors, have completed the audit of the 2016-17 fiscal year. Their audit report (beginning on page 25 of the packet linked here) was presented to and accepted by the Board at the December meeting.

Matt Hague, David L. Moonie & Company's lead auditor for RCEA, provided a report to the RCEA Board Ad Hoc Finance Subcommittee on December 12, 2018. He was not available to present the report to the Board in person at the December 17 or January 28, 2019, meeting, but will make an oral presentation to the full Board and answer questions at this meeting.

Staff is preparing materials for the Fiscal Year 2017-18 audit so the process can move forward expeditiously and RCEA can be up-to-date in time for the current year audit to begin on-schedule and be completed in a timely fashion.

RECOMMENDED ACTION

None – Information only.

This page intentionally left blank.

REDWOOD COAST EnergyAuthority

STAFF REPORT
Agenda Item # 8.2

AGENDA DATE:	February 28, 2019
TO:	Board of Directors
PREPARED BY:	Lori Biondini, Director of Business Planning and Finance David Carter P.E., Managing Research Engineer, Schatz Energy Research Center Dana Boudreau, Acting Executive Director
SUBJECT:	ACV Microgrid Updates, Construction Agreement, MOU and Lease

SUMMARY

Presentation from the Schatz Energy Research Center

(see attached Powerpoint presentation)

Engineering, Procurement, and Construction Agreement

In September 2017, the RCEA Board approved of partnering with the Humboldt State Sponsored Programs Foundation/Schatz Energy Research Center (HSUSFP/SERC), PG&E, and the County of Humboldt in response to the California Energy Commission (CEC) Grant Funding Opportunity GFO-17-302. At the same meeting, the Board approved issuance of a request for proposals for engineering, procurement, and construction of the solar plus storage system to support the grant proposal with RCEA as the client, with any potential contract contingent upon award of the grant.

In November 2017, HSUSPF/SERC as the Prime Contractor, submitted a grant proposal to the CEC under GFO-17-302 to implement the *Redwood Coast Airport Renewable Energy Microgrid Project* (Microgrid).

In December 2017, the RCEA Board accepted the proposal submitted by McKeever Energy and Electric (ME&E) for constructing the photovoltaic systems to be built for the Microgrid and directed staff to negotiate a contract with ME&E if funding was secured and subject to final Board approval.

In February 2018 the CEC released the Notice of Proposed Award (NOPA) for GFO-17-302, which indicated that the Microgrid was selected to receive a $5.0M award.

Upon notification that the CEC had selected the project for funding, HSUSPF/SERC, RCEA, and the County of Humboldt began working on pre-award activities such as CEQA compliance, final FAA approval, applying for a guaranteed loan from the U.S. Department of Agriculture's Rural Utilities Services, and procurement for the battery and solar systems.

On August 8, 2018 a contract was executed between HSUSPF/SERC and the CEC, which triggered the ability for HSUSPC/SERC to begin finalizing procurement activities and putting subcontracts into place.

In September SERC staff recommended to RCEA staff that the procurement pathways for the battery energy storage system (BESS) and the photovoltaic (PV) systems be merged in order to retire significant technical and economic risk. The reasoning behind this recommendation were as follows:

- The proposal funded by the CEC featured a DC coupled PV and BESS system at the multi-megawatt scale, which represents an emerging technology integration approach that may provide more efficient solar energy harvesting and will eliminate the impacts of large swings in PV output on the distribution grid.
    - Significant technical risk could be retired by having one company specializing in energy storage and DC power flow management responsible for both the energy storage and the PV production components of the DC coupled system.
- Significant contractual risk could also be retired by merging the BESS and PV system procurement because:
    - RCEA would have greater control of price and performance by selecting a single vendor who would be responsible for providing the integrated DC coupled PV and Battery system.
    - The costs associated with technology integration and contract administration would be reduced by using a single contract instead of multiple inter-related contracts with independent vendors to accomplish a working integrated system with emerging technologies.
- It could be possible to include ME&E as the PV subcontractor working under another larger vendor who would be ultimately responsible for providing a working integrated system to RCEA.

In October 2018, with the approval of RCEA staff, SERC sought and obtained consent from ME&E to have their participation in the project take the form of a subcontractor to Tesla Inc. (Tesla), in the event that RCEA elected to contract with Tesla. ME&E subsequently competed and was selected (contract pending) by Tesla to install the systems to be provided by Tesla, in the event that RCEA elected to contract with Tesla.

On October 22, 2018 a subcontract was executed between HSUSPF and RCEA for the Microgrid.

From October 2018 through February 2019, SERC has supported RCEA in contract negotiations with Tesla for both systems while also reviewing a proposal from Dynapower Company for a comparable BESS capable of being DC coupled to a PV system, that could be installed by ME&E in the event that RCEA were to elect to procure the BESS from Dynapower.

In February 2019 SERC engineers recommended that RCEA execute a single agreement with Tesla for both the BESS and PV as it would result in significant costs savings and reduce significant technical and contractual risks as compared to the alternative proposal consisting of a combination of a contract with Dynapower (for the BESS), a contract with ME&E (for the PV), and a contract with a TBD contractor to install the balance of systems for the integrated system.

Memorandum of Understanding and Lease Agreement

The Redwood Coast Airport Renewable Energy Microgrid Memorandum of Understanding (MOU) describes the terms and understanding between the Redwood Coast Energy Authority, the County of Humboldt, and the

Humboldt State University Sponsored Programs Foundation concerning the Redwood Coast Airport Renewable Energy Microgrid Project (Microgrid). This document is meant to confirm a relationship of the parties to the MOU and their intent to work together to develop, design, install, and operate the Microgrid, and in the near-term work to finalize a lease agreement between RCEA and the California Redwood Coast- Humboldt County Airport (Airport). RCEA general counsel and County of Humboldt counsel have been working on both the MOU and draft lease agreement and feel the MOU is ready for RCEA staff to execute based on the pending mutual agreement of all parties.

The draft lease agreement will require FAA approval and then be brought to the RCEA Board and the County Board of Supervisors for review and approval, likely later this year.

RECOMMENDED ACTION

Authorize the Executive Director to develop and execute, upon approval by the RCEA General Counsel, an agreement with Tesla Inc. for engineering, procurement, and construction services for the Redwood Coast Airport Renewable Energy Microgrid Project and any other associated documents as necessary.

Authorize the Executive Director to execute the Redwood Coast Airport Renewable Energy Microgrid Memorandum of Understanding based on pending mutual agreement of all parties.

ATTACHMENTS

Powerpoint Presentation from the Schatz Energy Research Center
Engineering, Procurement, and Construction Agreement Key Terms
Redwood Coast Airport Renewable Energy Microgrid Memorandum of Understanding

Redwood Coast Airport Renewable Energy Microgrid

-- Project Update --

RCEA Board Meeting
February 28, 2019
Eureka, CA

Copyright © 2018 Schatz Energy Research Center

Schatz Energy Research Center

HUMBOLDT STATE UNIVERSITY

Overview

- 2.1 MW PV array DC-coupled to 2 MW/8MWh battery storage → for CAISO wholesale market participation
- 300 kW net-metered PV array → to reduce airport electric bills
- Microgrid controller → will allow the system to island and provide uninterruptible power for long periods to the airport & US Coast Guard Air Station
- Existing back-up generators will serve as generation of last resort
- Four demand response capable EV chargers will be installed in the public parking area

2.4 MW_DC PV Array (7 acres)

Notes:
1) MW= megawatt, MWh= megawatt-hour, kW= kilowatt
2) System sizes are approximate pending completion of final design

Benefits

- RCEA revenue generation → sell power on the CAISO market when it is most valuable, provide grid services
- RCEA will provide local renewable power to local CCE customers
- RCEA will meet it's energy storage mandate (1% of aggregated peak load)
- County of Humboldt will lower its electric bills and green its airport
- County will gain resilience for critical emergency services → airport and Coast Guard
- Create local jobs
- Reduce GHG emissions

~2 MW/8 MWh battery energy storage (DC-coupled)

Key Project Partners

- Estimated Project cost = $11.6M
- Funding:
  - CA Energy Commission Grant = $5M
  - USDA Loan = up to $7M

The third microgrid in Humboldt County

Humboldt County is on the cutting edge of microgrid technology deployment, including:

- Award-winning Blue Lake Rancheria Low-Carbon Community Microgrid
- Blue Lake Rancheria Gas Station / Convenience Store Microgrid
- Redwood Coast Airport Renewable Energy Microgrid

PlayStation 777 Solar+ Microgrid

Blue Lake Rancheria Microgrid

SERC was prime contractor, system integrator, and owner's engineer for this award winning CEC-funded project.

Redwood Coast Airport Microgrid

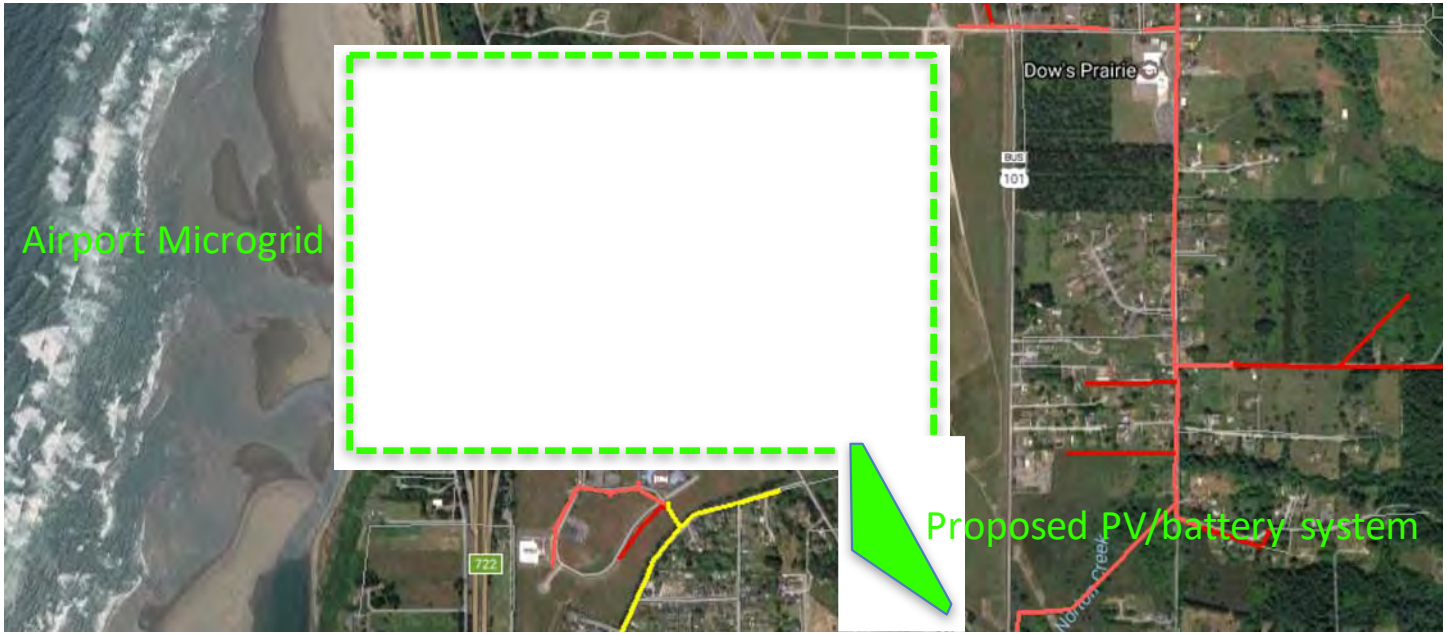

Adapted from PG&E PVRAM map.

- End of Janes Creek 1103 feeder (PG&E distribution system)
- Will serve 18 retail electric accounts
- Microgrid distribution circuit and controls owned, operated, and maintained by PG&E
- Solar and battery owned and operated by RCEA

Redwood Coast Airport Microgrid

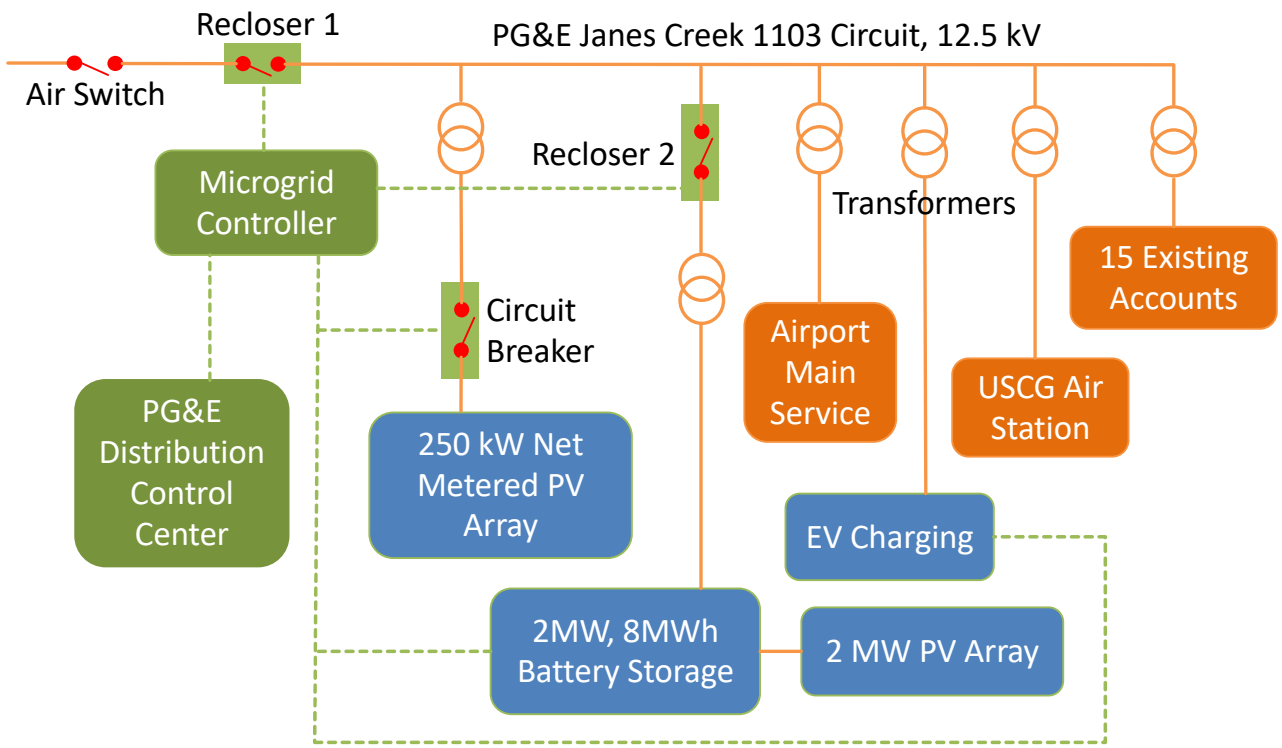

Simplified Schematic

Accomplishments to Date

- CEQA process complete → Mitigated Negative Declaration
- Prime and subcontracts executed
- FAA approval process on schedule including: NEPA process, Tribal consultations (complete), approval for non-aeronautical use, obstruction analysis and glare analysis
- USDA loan application nearly complete
- Microgrid controls contract with Schweitzer Engineering executed
- Dedicated PG&E team highly engaged using separate funding to support their participation
- Project team technical kick-off recently took place, project work is well underway

Schedule

Year/Quarter	Activity/milestone
Q1 - Q4 2019	Final design and permitting
Q1 2020	Lab testing of controls, construction begins
Q4 2020	Construction complete
Q1 2021	Commissioning complete
2021-2022	Data collection, evaluation and reporting
Q1 2023	CEC contract ends
2020-2045	Project/lease continues

Key next steps

- Provide approval for RCEA staff to execute contract with Tesla for PV/battery
- Provide approval for RCEA to execute MOU with County of Humboldt and HSUSPF/SERC to engage in Redwood Coast Airport Microgrid Project
- SERC will submit grid interconnection applications on RCEA's behalf
- RCEA and Humboldt County will finalize lease agreement

Thank you

Questions?

Materials Received After Packet Publication

Redwood Coast Airport Renewable Energy Microgrid

-- Project Update --

RCEA Board Meeting
February 28, 2019
Eureka, CA

Agenda Item 8.2
CORRECTED presentation

Copyright © 2018 Schatz Energy Research Center

Schatz Energy Research Center

HUMBOLDT STATE UNIVERSITY

REDWOOD COAST ENERGY AUTHORITY

COUNTY OF HUMBOLDT The Home of the Redwoods

PG&E

Overview

- 2.1 MW PV array DC-coupled to 2 MW/8MWh battery storage → for CAISO wholesale market participation
- 300 kW net-metered PV array → to reduce airport electric bills
- Microgrid controller → will allow the system to island and provide uninterruptible power for long periods to the airport & US Coast Guard Air Station
- Existing back-up generators will serve as generation of last resort
- Four demand response capable EV chargers will be installed in the public parking area

2.4 MW_DC PV Array (7 acres)

Notes:
1) MW= megawatt, MWh= megawatt-hour, kW= kilowatt
2) System sizes are approximate pending completion of final design

Benefits

- RCEA revenue generation → sell power on the CAISO market when it is most valuable, provide grid services
- RCEA will provide local renewable power to local CCE customers
- RCEA will meet it's energy storage mandate (1% of aggregated peak load)
- County of Humboldt will lower its electric bills and green its airport
- County will gain resilience for critical emergency services → airport and Coast Guard
- Create local jobs
- Reduce GHG emissions

~2 MW/8 MWh battery energy storage (DC-coupled)

Key Project Partners

- Estimated Project cost = $11.6M
- Funding:
  - CA Energy Commission Grant = $5M
  - USDA Loan = up to $7M

The third microgrid in Humboldt County

Humboldt County is on the cutting edge of microgrid technology deployment, including:

- Award-winning Blue Lake Rancheria Low-Carbon Community Microgrid
- Blue Lake Rancheria Gas Station / Convenience Store Microgrid
- Redwood Coast Airport Renewable Energy Microgrid

Blue Lake Rancheria Microgrid

SERC was prime contractor, system integrator, and owner's engineer for this award winning CEC-funded project.

PlayStation 777 Solar+ Microgrid

Redwood Coast Airport Microgrid

Adapted from PG&E PVRAM map.

- End of Janes Creek 1103 feeder (PG&E distribution system)
- Will serve 18 retail electric accounts
- Microgrid distribution circuit and controls owned, operated, and maintained by PG&E
- Solar and battery owned and operated by RCEA

Redwood Coast Airport Microgrid

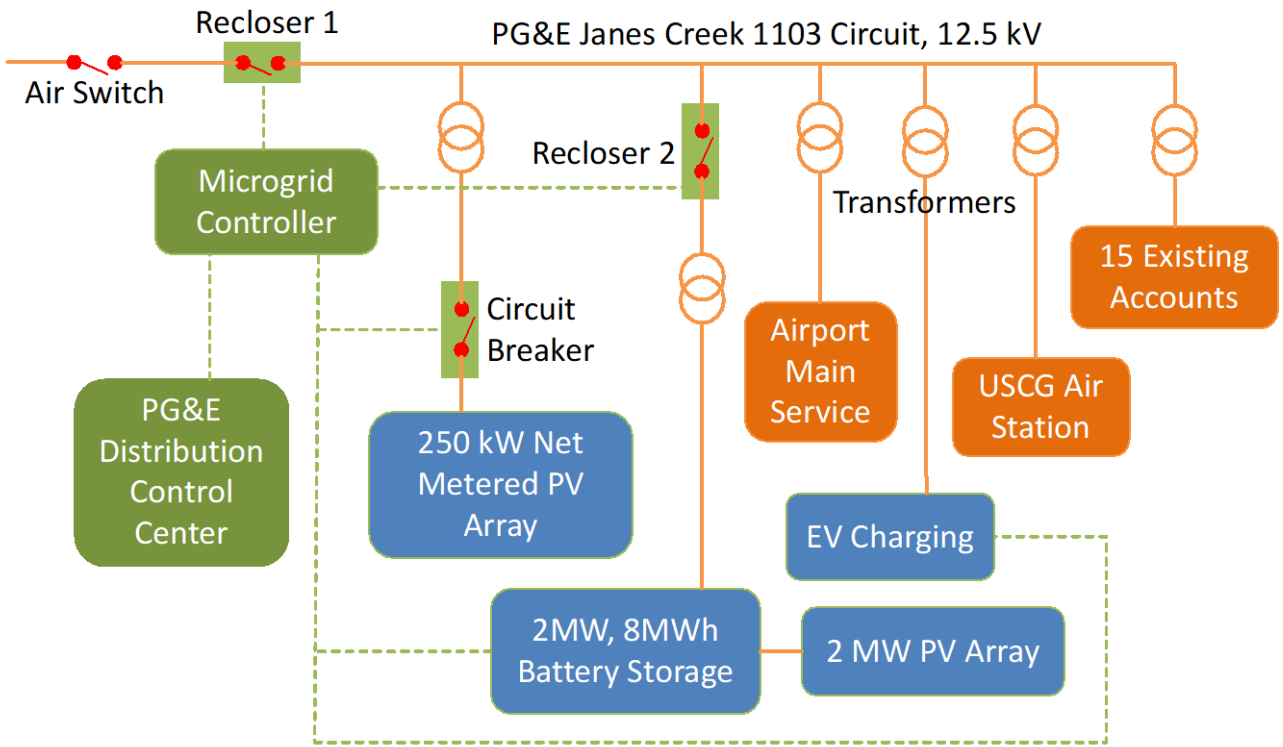

Simplified Schematic

Accomplishments to Date

- CEQA process complete → Mitigated Negative Declaration
- Prime and subcontracts executed
- FAA approval process on schedule including: NEPA process, Tribal consultations (complete), approval for non-aeronautical use, obstruction analysis and glare analysis
- USDA loan application nearly complete
- Microgrid controls contract with Schweitzer Engineering executed
- Dedicated PG&E team highly engaged using separate funding to support their participation
- Project team technical kick-off recently took place, project work is well underway

Schedule

Year/Quarter	Activity/milestone
Q1 - Q4 2019	Final design and permitting
Q1 2020	Lab testing of controls, construction begins
Q4 2020	Construction complete
Q1 2021	Commissioning complete
2021-2022	Data collection, evaluation and reporting
Q1 2023	CEC contract ends
2020-2045	Project/lease continues

Key next steps

- Provide approval for RCEA staff to execute contract with Tesla for PV/battery
- Provide approval for RCEA to execute MOU with County of Humboldt and HSUSPF/SERC to engage in Redwood Coast Airport Microgrid Project
- SERC will submit grid interconnection applications on RCEA's behalf
- RCEA and Humboldt County will finalize lease agreement

Thank you

Questions?

Engineering, Procurement, and Construction Agreement

(PV + Storage – Utility Scale, Lump Sum, US)

This Engineering, Procurement and Construction Agreement (this "Agreement") is entered into by and between the parties listed in the Key Terms below (each, a "Party" and together the "Parties") effective as of February __, 2019 (the "Effective Date"), and sets forth the terms and conditions on which (a) Tesla (as defined below) will engineer, procure equipment for and construct the Project (as defined below) at the Site (as defined below); and (b) RCEA (as defined below) will purchase such work and services from Tesla.

Key Terms			
These Key Terms set out the scope of this Agreement and certain key terms.			
Parties:			
Tesla:	Tesla, Inc., a corporation organized under the laws of Delaware, whose registered office is at 3500 Deer Creek Road, Palo Alto, CA, 94304.		
RCEA:	Redwood Coast Energy Authority, a joint powers authority organized pursuant to California Government Code Section 6500 et seq., located in Eureka, Humboldt County, California.		
Project:			
Project:	The solar photovoltaic and energy storage project to be located at the Site, comprised of (i) a Tesla industrial energy storage system as described below, (ii) two separate solar photovoltaic electricity generating systems (one of which is behind the utility meter and the other of which is in front of the utility meter and coupled with the BESS), and (iii) certain "AC Equipment" and "Ancillary Work".		
Site:	3651 Boeing Ave, McKinleyville, CA 95519		
Utility:	Pacific Gas and Electric (PG&E)		
Battery Energy Storage System:			
Nameplate Maximum Power and Energy Capacity: Delivered hardware may exceed nameplate values.		**Standard (energy) mode:**	**Peak power mode:**
	Power:	2 MW	N/A
	Energy:	8 MWh	N/A

Solar System		
Nameplate Capacity: Delivered hardware may exceed nameplate values.	2.5 MWdc (of which 2.1 MWdc is in front of the utility meter and coupled with the BESS and the remainder is AC coupled to the utility grid without energy storage)	
Project Schedule:		
Key Milestone Dates:	Limited Notice To Proceed Deadline:	3/8/2019.
	Notice To Proceed Deadline	Within 5 working days of approved 90% Drawing Package.
	All RCEA Permits obtained by RCEA and copies delivered to Tesla:	3/1/2020
	Site Access Date:	3/15/2020.
	Provision by RCEA of Backfeed Power and connection by RCEA of communications system at delineation of RCEA-Tesla interfaces	Within 30 days following installation by Tesla of 2.5MVA transformer, but not sooner than September 11, 2020.
	Guaranteed Substantial Completion Date:	12/31/2020 (as such date may be extended by Change Order)
Price & Payment:		
EPC Contract Price:	USD 7,331,871. This amount is exclusive of taxes, and is subject to any Change Orders, but is inclusive of shipping and other additional fees, expenses or disbursements.	

Redwood Coast Airport Renewable Energy Microgrid
Memorandum of Understanding
among
County of Humboldt,
Redwood Coast Energy Authority
and
the Humboldt State University Sponsored Programs Foundation /
Schatz Energy Research Center

This Memorandum of Understanding ("MOU") sets forth the terms and understanding between the County of Humboldt ("County"), the Redwood Coast Energy Authority ("RCEA"), and the Humboldt State University Sponsored Programs Foundation/Schatz Energy Research Center ("HSUSPF/SERC"), from here on referred to as the Parties to this MOU ("Parties"), concerning the Redwood Coast Airport Renewable Energy Microgrid ("Microgrid"). The Parties intend to develop, design, install and operate the Microgrid at the California Redwood Coast - Humboldt County Airport ("Airport").

1. Background

The following facts describe and form the rationale for the Microgrid project:

- The Airport and adjacent Coast Guard Sector Humboldt Bay Air Station provide critical disaster relief services to Humboldt County and surrounding region.
- Availability of electrical power for these facilities is critical to the provision of emergency services.
- The Microgrid is a solar-based system that will provide local, renewably generated electrical power for extended periods without the need for operation of the larger electrical grid and without the need for fuel deliveries, thus ensuring the Airport can operate during emergencies.
- The HSUSPF/SERC has received a $5M grant from the California Energy Commission ("CEC") to design, install, operate, monitor and evaluate the performance of the Microgrid at the Airport.
- The Microgrid's primary electrical circuit will be owned by the Pacific Gas & Electric Company ("PG&E") and will be located at the end of their Janes Creek 1103 distribution circuit.
- The proposed Microgrid will include the installation of a ~2 MW solar electric array coupled with a ~2 MW/8 MWh battery storage system for wholesale market participation, a ~300 kW solar electric array for net metered service, and four electric vehicle charging stations.[1]
- The County is seeking ways to generate additional revenue and/or reduce operating costs at the Airport; it is expected that the Microgrid will generate an average of approximately 430 MWh/yr, which will offset the Airport's energy usage.[2]

[1] Equipment capacities are approximate based on the preliminary system design and are subject to change.

[2] Approximate energy savings, greenhouse gas emission savings and project costs are stated throughout this MOU. These estimates are based on the stated approximate system capacities and other assumptions. Actual savings and costs may vary.

- Solar electric arrays are incorporated into the Airport Layout Plan which has received conditional approval from the Federal Aviation Administration ("FAA").
- The County is seeking ways to improve the marketing image of the Airport. The Microgrid project will serve this purpose by installing solar power to "green" the Airport and adding resiliency benefits by installing microgrid technology.
- The RCEA has established a Community Choice Energy ("CCE") program that provides the generation component of electricity service to 93% of eligible electricity customers in Humboldt County.
- RCEA, as part of the CCE program, has goals to develop local renewable power resources, is required to meet requirements of the State of California's Renewable Portfolio Standard, and is required to provide energy storage ≥1% of the peak load for RCEA customers. RCEA aims to develop local renewable power sources as a way to improve regional energy security, create local jobs, keep energy dollars flowing in the local economy, and lessen the climate change impacts of our energy use.
- RCEA is procuring a $6M loan from the United States Department of Agriculture's Rural Utilities Service to provide cost share to implement the project.
- By leading the Microgrid project, the HSUSPF/SERC furthers its mission to promote the use of clean and renewable energy and furthers its efforts to move Humboldt County toward a more energy secure future.
- The HSUSPF/SERC has demonstrated expertise and competence to carry out a project such as the Microgrid by recently completing the award-winning Blue Lake Rancheria Renewable Energy Microgrid Project.
- The HSUSPF/SERC has assembled an expert team to carry out the Microgrid project, including the substantial involvement of PG&E, the utility responsible for local electricity grid infrastructure.
- The RCEA is a local government Joint Powers Authority, comprised of the County of Humboldt; Cities of Arcata, Blue Lake, Eureka, Ferndale, Fortuna, Rio Dell, and Trinidad; and the Humboldt Bay Municipal Water District. RCEA administers CCE program in Humboldt County for the benefit of its customers. Power from the 2 MW solar electric array and coupled battery storage system will be utilized to serve RCEA CCE customers. RCEA will sell dispatchable renewable electricity from the Microgrid on the wholesale power market and financial gain realized from this market participation will benefit all CCE customers, including the County of Humboldt.
- The estimated operating life of the Microgrid is 25 years; it is assumed that the salvage value will be sufficient to pay for decommissioning and removal.
- At the present time, there is no foreseeable aeronautical use planned for the land area proposed for the Microgrid project and the County considers the Microgrid project to be a vital non-aeronautical land use at the Airport.
- The Microgrid project will generate Renewable Energy Certificates (RECs) through registration in the Western Renewable Energy Generation Information System (WREGIS).
- The RECs generated by the 300 kW solar system will accrue to the County.
- The RECs generated by the 2 MW solar plus battery system will accrue to RCEA.

Because of these facts, the Parties agree to work collaboratively to complete the Microgrid project for their mutual benefit and for the benefit of the residents of Humboldt County.

2. Purpose

The purpose of this MOU is to describe how the roles and responsibilities are allocated and how the costs and benefits associated with the Microgrid project are shared among the Parties. The intention is to establish a clear framework for the Parties that leads to successful execution of the Microgrid project. This MOU embodies the understanding among the Parties for the project development period (as described in Section 7 below) and will be supplemented by subsequent agreement(s) such as, for example, a Lease and/or an Operational Agreement.

3. Division of Responsibilities

This section describes the Microgrid project responsibilities assigned to each of the Parties.

County of Humboldt Responsibilities:

- Prepare an Initial Study and subsequent Mitigated Negative Declaration for compliance with the California Environmental Quality Act[3]
- Work with HSUSPF/SERC to obtain project approval from the FAA
- Prepare an Environmental Assessment as required by the FAA for compliance with the National Environmental Policy Act
- Provide the land necessary for the RCEA owned solar electric and energy storage assets (County and RCEA will negotiate and enter into a Land Lease Agreement)
- Host the four electric vehicle charging stations in the short term parking lot at the airport (see preliminary EV Charging Site Plan, Attachment 2, and EV Charging Station MOU, Attachment 3)
- Review preliminary EV charging station site plan for compliance with ADA requirements for EV charging station installations
- With advance notice, allow access to the Microgrid project site to RCEA and HSUSPF/SERC personnel and subcontractors for project development purposes.
- Provide readily available data such as geotechnical reports, topographical survey data, electricity consumption data, as-built engineering plans for onsite electrical and water systems for Microgrid project development purposes
- Participate in construction sequencing, commissioning, and onsite test planning to ensure that airport security standards are maintained during construction and that planned power outages are scheduled for times when impacts can be minimized
- Serve as primary point of contact for all communication with FAA, and negotiate on behalf of Parties regarding FAA regulatory requirements, mandates, emergencies, and other matters that directly or indirectly impact the installation, operation, and maintenance of the Microgrid
- Obtain bids for removing designated trees that border the Microgrid project site along Airport Road

[3] This was required by the California Energy Commission before funding this project. This task was completed when the Notice of Determination was recorded May 8, 2018.

- Work with HSUSPF/SERC, RCEA, and PG&E to set up the aggregated net energy metering account that will allow the County to benefit from the 300 kW solar array that will be owned and operated by RCEA on the County's behalf
- Work with HSUSPF/SERC and RCEA to establish a new water service in RCEA's name to provide water to the Microgrid project site for panel washing, site management, or similar Microgrid operation and maintenance activities, if HSUSPF/SERC determines that the project budget supports the estimated construction cost of a new water service If a new water service is not installed, RCEA will truck water in to the site as needed for maintenance activities.
- Agree to negotiate in good faith with RCEA to determine the fate of and financial impacts of decommissioning the Microgrid project before its 25-year operating life has elapsed, in the event that the County determines that the project site is needed for an aeronautical use. This will occur if decommissioning is required by the FAA and only as a last resort and after other options are explored.
- Shall have no financial responsibility for the removal and/or modification of the Microgrid after the 25-year operating life has elapsed.
- Provide necessary documents to authorize RCEA to submit the necessary interconnection applications Pacific Gas & Electric (PG&E) for interconnecting the generation resources. The applicant to PG&E will be RCEA and there will be no cost to the County

RCEA Responsibilities:

- Submit the necessary interconnection applications Pacific Gas & Electric (PG&E) for interconnecting the generation resources. The applicant to PG&E will be RCEA and there will be no cost to the County.
- Purchase and install the solar electric systems, including a 2 MW PV array for wholesale market participation and a 300 kW PV array for net metered service[1]
- Purchase and install a battery energy storage system (approximately 2 MW and 8 MWh)[1]
- Purchase and install a microgrid protection and control system, most of which will be deeded to PG&E when the project becomes operational
- Purchase and install four electric vehicle charging stations in the short term parking lot at the airport (see preliminary EV Charging Site Plan, Attachment 2), and EV Charging Station MOU, Attachment 3)
- Work with HSUSPF/SERC to establish a new water service to provide water to the Microgrid project site for panel washing and site management, or similar Microgrid operation and maintenance activities, if HSUSPF/SERC determines that the project budget supports the estimated construction cost of a new water service. If a new water service is not installed, RCEA will truck water in to the site as needed for maintenance activities.
- Own, operate, and maintain the above listed assets and maintain the grounds of the project site for 25 years
- Mitigate the effect of the photovoltaic array with the FAA, if glint or glare from the solar panels is later found to have an impact on the air traffic controllers/tower and/or air navigation.
- Decommission the above listed assets at the end of the 25-year project period

- Operate the 300 kW solar array when the PG&E grid is energized so that all electricity produced will be credited to County electrical accounts at the airport
- Provide assurance to the County that the PV NEM array will deliver no less than 350,000 kWh/yr in any year to the airport facility meter to be installed for the generating account as part of the planned aggregated NEM service. The projected average annual output from the PV NEM array is 428,000 kWh/yr, with year-to-year variations in output due to weather conditions and solar panel degradation.
- Provide an annual energy generation report and financially compensate the County for energy shortfalls below the minimum specified amount (350,000 kWh) within 60 calendar days of the end of the true-up period, calculated as the average electrical price of the rate for the year in question times the generating shortfall below 350,000 kWh. The true-up period will be a one-year period marking the anniversary of the system's interconnection. The average rate will be calculated by dividing all per-kWh electrical generation, transmission, and distribution charges for the aggregated benefitting accounts during the year in question by the total billed kWh consumption for these accounts. This assurance is subject to terms and conditions within the pending lease agreement between the County and RCEA, including force majeure and other factors that may affect total energy delivered.
- Operate the 2 MW solar array and the battery when the PG&E grid is energized so that the electricity produced is exported through trading in the California Independent System Operator ("CAISO") markets and to the benefit local CCE customers
- Operate the Microgrid in the event of a power outage on the PG&E distribution feeder serving the Airport to maintain backup power for the Airport and Coast Guard for as long as possible within acceptable operating specifications for all Microgrid equipment
- Reconnect the Microgrid to the main PG&E grid after the PG&E grid has been restored following a power outage affecting the microgrid
- Agree to negotiate in good faith with the County to determine the fate of and financial impacts of decommissioning the Microgrid project in the event that the County determines that the project site is needed for an aeronautical use before its 25-year operating life has elapsed

HSUSPF/SERC Responsibilities:

- Execute the prime contract (EPC-17-055) with the CEC, taking responsibility to facilitate delivery of the project as per the intent of the contract Scope of Work (See grant Scope of Work, Attachment 4)[4]
- Serve as owner's engineer for the RCEA to facilitate and manage system design, testing, construction, interconnection, documentation, and commissioning
- Serve as technology and system integrator including facilitating necessary approvals for interconnection to the PG&E distribution grid and participation in CAISO wholesale energy markets
- Manage the overall project, including the participation of all subcontractors and project partners
- Support the County in obtaining FAA approval to construct the Microgrid project

[4] EPC-17-005 was fully executed on 8/8/2018.

- Coordinate the design and testing of the microgrid controls to meet PG&E requirements
- Design, bid, and oversee construction of the EV charging stations to be installed in the short-term parking lot at the airport
- Design, bid, and oversee construction of a new water service to serve the RCEA and provide water to the Microgrid project site for panel washing and site management, if HSUSPF/SERC determines that the project budget supports the estimated construction cost of a new water service. If a new water service is not installed, RCEA will truck water in to the site as needed for maintenance activities.
- Design, bid, and oversee construction of the balance of systems between the battery energy storage system and the microgrid circuit, including the physical infrastructure to support the microgrid controls

4. Distribution of Costs and Benefits

Table 1 outlines how the costs and benefits associated with the Microgrid project are distributed among the Parties. Table 2 outlines how the costs and energy benefits associated with the 300 kW PV array for net metered service are distributed among the Parties.

Table 1. Microgrid Project – Costs and Benefits for Total Project[5]

	Costs	Benefits
RCEA	● Proposal/pre-award phase o Internal labor costs ($20,000) o Technical assistance contract with HSUSPF/ SERC ($20,000) ● Project labor costs ($150,000) ● RCEA share of battery storage system ($1,371,358) ● PV systems - 2.3 MW total ($4,600,000) ● Electric vehicle charging system ($25,000) ● EV charging operation and maintenance ($5,700/yr) ● PV O&M ($47,000/yr) ● Battery O&M ($30,000)	● In the proposal phase of the project it was estimated that the wholesale power system could generate about $250,000/yr in revenue.
County	● CEQA Initial Study & Mitigated Negative Declaration ($20,000) ● Environmental Assessment for NEPA ($60,000) ● FAA approval process ($15,000)	● Estimated production of an average of 430 MWh/yr of electricity by the 300 kW PV array, with a minimum of ~360 MWh/yr and a maximum of ~470 MWh/yr.
HSUSPF/ SERC	● Proposal preparation ($50,509) ● Indirect project costs counted as match for CEC grant ($326,370)	
Costs covered by CA Energy Commission Grant	● Electricity distribution infrastructure ($657,441) ● CEC share of battery storage system ($960,607) ● Microgrid control system ($596,805) ● Coordinated electrical house ($454,197) ● Transformer ($66,794) ● Balance of system materials & services ($250,175) ● Electrical engineering services ($99,592) ● Prime contractor labor ($1,222,682) ● Additional subcontractors ($219,749) ● Travel, indirect, misc. ($471,958)	

[5] The majority of stated costs and benefits are best estimates at the outset of the project; actual costs and benefits will vary. Costs specified to a high level of significant figures were specifically stated as such in the CEC contract, but are still subject to change.

Table 2. Microgrid Project – Costs and Benefits for 300 kW PV array[4]

	Costs	Benefits
RCEA	● PV system– 300 kW NEM array (Approximately $600,000) ● PV O&M ($6,640/yr for 25 years)	● Land lease of 9 acres for the combined PV system (2.3 MW total), valued at about $3,400/yr based on the Bureau of Land Management Instruction Memorandum No. 2017-096
County	● CEQA Initial Study & Mitigated Negative Declaration ($20,000) ● Environmental Assessment for NEPA ($60,000) ● FAA approval process ($15,000)	● Estimated production of an average of 430 MWh/yr of electricity by the 300 kW PV array, with a minimum of ~360 MWh/yr and a maximum of ● ~470 MWh/yr.

5. Additional Benefits

There are significant benefits to the County and the Airport that are difficult to quantify in simple direct monetary terms. These include the following:[4]

- Added resilience for the Airport and Coast Guard Air Station. These facilities will have a more secure supply of electrical power that does not rely on outside sources of energy or fuel. This is particularly important in times of a natural disaster when Humboldt County could be isolated for weeks from the outside world and the only method to get supplies in and out of the County would be via aircraft. In addition, aircraft would be critical to distributing supplies around the County and could result in saving lives.
- Added resiliency and reliability in the electrical power will also buffer against short-term outages. It is not uncommon for power outages to occur during winter storms, and utilities may shut off parts of the grid due to extreme fire danger. The estimated value of these short-term resiliency benefits is $52,000 per year. A task under the Microgrid project is to further refine this estimate and this data will be shared when the results are available.
- The Airport will offset approximately 130 metric tons of CO_2 per year as a result of the electricity provided by the 300 kW solar array, helping to achieve regional greenhouse gas reduction targets.
- Helping to mitigate climate change is an important benefit, especially in a coastal community that will be adversely affected by sea level rise.
- Adding electric vehicle charging at the airport will serve to attract customers, will improve the service level that customers receive, and will decrease the airport's environmental footprint. It may also accelerate and support a business case to electrify airport ground support equipment.
- Conservative estimates of job creation benefits indicate that implementing the Microgrid project will result in an estimated 37 FTE during the construction phase with $1.5M in earnings and $3.4M in economic output. Approximately 0.2 FTE jobs per year will be supported during sustained operations with $10,000 per year in earnings and $14,600 per year in economic output.

6. Funding

The responsibilities between the Parties for covering various costs associated with this project are articulated in Section 4. If significant additional and unforeseen costs arise (for example tree removal and accessibility improvements) during the term of this MOU, the Parties agree to negotiate in good faith to decide how the costs will be covered. Section 8 of this MOU will be used to modify the MOU in such cases.

7. Duration/Timeframe

This MOU represents the Parties' current understanding of their respective responsibilities in developing, operating and maintaining the Microgrid project and may be revised by mutual consent of authorized officials from the Parties, including through the adoption of implementing agreements between any of the Parties. This MOU shall become effective upon signature by authorized officials from all three the Parties and will remain in effect until modified or terminated by the Parties by mutual consent. In the absence of mutual agreement by the authorized officials from the Parties, this MOU shall terminate at the end of the CEC grant period on March 31, 2023. Following the end of the CEC grant period, additional agreements may continue to dictate roles and responsibilities associated with the Microgrid project (e.g., the land lease between the County and RCEA).

8. Amendments

This MOU may be amended by mutual agreement among the Parties to address circumstances that cause or may cause unforeseen impacts to any Party, or as otherwise deemed necessary by the Parties.

9. Notices

Any and all notices required to be given pursuant to the terms of this MOU shall be in writing and either served personally or sent by certified mail, return receipt requested, to the respective addresses set forth in Section 10. Notice shall be effective upon actual receipt or refusal as shown on the receipt obtained pursuant to the foregoing.

10. Signatories

County of Humboldt
Cody Roggatz
Director of Aviation

[redacted]

Date:

Signature:

Redwood Coast Energy Authority
Matthew Marshall
Executive Director
[redacted]

Date:

Signature:

Humboldt State University Sponsored Programs Foundation
Kacie Flynn
Executive Director, HSU Sponsored Programs Foundation
[redacted]

Date:

Signature:

Schatz Energy Research Center
Peter Lehman
Founding Director
[redacted]

Date:

Signature:

STAFF REPORT
Agenda Item # 8.3

AGENDA DATE:	February 28, 2019
TO:	Board of Directors
PREPARED BY:	Lori Taketa, Clerk of the Board
SUBJECT:	Finance Subcommittee Membership

SUMMARY

The Board of Directors created a standing Finance Subcommittee at its January 28 meeting, and appointed Chair Michael Winkler and Director Sheri Woo as members. The subcommittee can accommodate up to two more directors.

DISCUSSION

The Finance Subcommittee was created out of the Board's stated desire to enhance public transparency of RCEA's financial transactions, increase the Board's understanding of energy procurement processes and support a continuing knowledge base for informed decision making despite the Board's changing composition. Subcommittee member duties are initially to work with staff and advise the Board of Directors on matters relating to audit, finance and budget.

RECOMMENDED ACTION

Appoint up to two more directors to the Finance Subcommittee for one-year terms ending on the first regular Board meeting of 2020.

ATTACHMENT

None.

This page intentionally left blank.

REDWOOD COAST EnergyAuthority

STAFF REPORT
Agenda Item # 10.1

AGENDA DATE:	February 28, 2019
TO:	Board of Directors
PREPARED BY:	Lori Biondini, Director of Business Planning and Finance
SUBJECT:	Offshore Wind Project Update

SUMMARY

Infrastructure Updates
A kickoff meeting was held in January with the Humboldt Bay Harbor District, RCEA, EDPR Offshore North America LLC, Principle Power, Inc., and Aker Solutions, Inc. in attendance. The project team presented a high-level schedule of project development activities, and the Harbor District is planning on developing a construction timeline for harbor infrastructure needed for the project.

Energy Valuation
The project team has provided hourly energy resource data to The Energy Authority (TEA) which will provide analysis to help RCEA determine how the project's offshore wind energy resource will serve its customer load and other needs.

RCEA Costs
The Headwaters fund has begun accepting applications for fiscal year 2018-19 grants. This year's funding strategy is to support projects consistent with the County's economic development strategy, *Prosperity! 2018*, which includes the Building and Systems Construction industry. Per redwoodcoastprosperity.com: "Building and Systems Construction includes a number of industry groups that focus on the physical infrastructure of communities. The industry group serves the Redwood Coast regional needs for housing, commercial structures and community systems, such as roadways and utilities, as well as state and national customers." Staff intends to submit a letter of interest and be invited to apply for up to $30K of grant funds towards RCEA staff time to continue working on developing the Redwood Coast Offshore Wind project and supporting the development of an offshore wind energy industry hub in Humboldt County.

RECOMMENDED ACTION

None. Information only.

ATTACHMENTS

None.

This page intentionally left blank.

REDWOOD COAST EnergyAuthority

STAFF REPORT

Agenda Item # 11.1

AGENDA DATE:	February 28, 2019
TO:	Board of Directors
PREPARED BY:	Lou Jacobson, Director of Demand Side Management
SUBJECT:	CAC 100% Clean and Renewable 2025 Goal Recommendation

SUMMARY

The Community Advisory Committee (CAC) moved to make the following recommendation during their January 8, 2019 meeting:

> Motion: Fiske. Second: Bell. Amended: Latimer. By consensus, the Committee agreed to recommend that the RCEA Board of Directors adopt a 100 percent clean and renewable electricity by 2025 goal without modifying other existing RCEA targets and establish a process to obtain public input on the definitions of "clean" and "renewable."

Staff requested that the Energy Authority (TEA) conduct an initial impact analysis using the existing definition for renewables. TEA provided an initial forecast terminating in 2023 and noted that utility rate projections and the associated ramp-up to 100% renewable beyond 2023 are highly speculative.

The initial forecast reviewed three renewable portfolio standard (RPS) scenarios terminating in 2023:

- 46% RPS under business as usual (BAU),
- 82.9% RPS by 2023 without extended biomass and,
- 82.9% RPS by 2023 with extended biomass where "extended" means keeping these resources under contract beyond their current expiration dates.

The five-year analysis (2019-2023) suggests that adopting a 100 percent clean and renewable electricity by 2025 goal will likely necessitate modifying existing RCEA targets including but not limited to:

- Reserves
- Local solar investments, and
- Community programs.

Staff recommend considering the following:

- RCEA leads a community discussion on the definition of 100% clean and renewable electricity. The discussion can be held in late March or early April.
- Reassess and expand the initial impact analysis after the community discussion.
- Represent findings and additional information during the regularly scheduled April or May Board meeting.

FINANCIAL IMPACTS

The preliminary analysis suggests that adopting a 100 percent clean and renewable electricity by 2025 goal will reduce CCE five-year (to 2023) net revenue as compared to BAU by:

- $6.586 million without extended biomass and,
- $6.784 million with extended biomass.

RECOMMENDED ACTION

Discuss and direct staff on next steps.

ATTACHMENTS

None

Public Comment

For February 28, 2019
RCEA Board of Directors Meeting
Agenda Item #11.1:
Community Advisory Committee
100% Clean and Renewable by 2025
Goal Recommendation

This page intentionally left blank.

From: Sheri L Woo
To: [redacted]
Cc: Richard Engel; Matthew Marshall; Lori Taketa
Subject: Re: Support Clean, Renewable Energy in Humboldt County
Date: Tuesday, February 19, 2019 10:18:16 PM

Hi Michael, thank you for your letter. I'm cc-ing our ED, Acting ED, and Board Secretary to have your letter become included in the Board packet. They will redact your contact info. I haven't seen the agenda yet, so not much sure if this policy is up for approval this month.

It takes effort to compose persuasive thoughts. Thanks again for writing.

Sheri

On Tue, Feb 19, 2019, 7:01 PM Michael Guest [redacted] wrote:

> Sheri Woo
> RCEA
>
> RE: Support Clean, Renewable Energy in Humboldt County
>
> null
>
> Dear RCEA Board Members:
> I'm writing to urge you take action at your meeting on February 28, 2019, and adopt the official goal of providing 100% clean, renewable energy to Humboldt County by 2025.
> We are facing a global climate crisis. Locally, the effects of the climate crisis include potentially catastrophic sea level rise, along with an increase in the number and severity of droughts and wildfires. But we aren't just affected by climate change; we're also helping to cause it. And one of the biggest sources of greenhouse gas emissions is electricity generation.
> Fortunately, we live in a time when many carbon-free electricity sources are becoming cost-competitive with dirty fossil fuels. And we live in a place, Humboldt County, where the community can express its energy priorities directly through the Community Choice Energy program administered by RCEA.
> RCEA is already successfully providing cleaner electricity to Humboldt County consumers at lower rates than PG&E. But the climate crisis demands that we take more ambitious action.
> Your Community Advisory Committee is recommending that the Board adopt a goal of 100% clean, renewable electricity by 2025. The CAC's recommendation is both reasonable and ambitious. With good planning and the right priorities, RCEA can achieve the community's goals for clean and renewable energy while still charging competitive rates to consumers.
> Please adopt the CAC's recommendations and help move Humboldt County to a clean energy future.
> Sincerely,
>
> Sincerely,

Mr. Michael Guest
[redacted]

From: Sheri L Woo
To: [redacted]; Lori Taketa
Subject: Re: RCEA: Please Mandate Clean, Renewable Energy for Humboldt
Date: Thursday, February 21, 2019 8:28:26 PM

Hi Micheal, thanks for your letter. We have been barraged with emails and it's nice to get one from someone who is local and who has taken the time to put thoughts to paper (well, screen!)

I'm including your email into the public comments for next Bd packet, but staff will redact your contact info.
Thanks again,
Sheri

On Thu, Feb 21, 2019 at 7:36 PM Michael McLaughin [redacted] wrote:

> Sheri Woo
> RCEA
>
> RE: RCEA: Please Mandate Clean, Renewable Energy for Humboldt
>
> null
>
> Dear RCEA Board Members:
>
> Rooftop solar has proven to be the most useful method of power generation for homes and increasingly for battery electric autos.
> Energy storage technology is fast improving with larger-scale batteries soon coming to maintain steady power grids.
>
> Please adopt the official goal of providing 100% clean, renewable energy to Humboldt County by 2025.
>
> We've now understood that hydropower destroys not only salmon, other anadromous fish stocks, but all wildlife and lowers our downriver water tables, dessicating the soil and forest, making catastrophic fires more likely.
>
> Humboldt Bay, the last great California estuary for migratory birds, and a nursery for many aquatic organisms, has been damaged in the past by the false ideal of nuclear power, that dangerous plant lasting only about 10 years before shutdown.
>
> The use of wood for power is and in the past did to a greater extent cause losses and endangerment of forest species - wood, wood chips and burning are now necessarily archaic power sources. we have lost 98% of our old growth redwood, heating locally by reducing the tall cool forest cover that also moderates winters and captures summer fog - up to a foot or more of precipitation.
> So these forests, originally the highest greenhouse gas /carbon sequesterers in temperate climes worldwide, need relief from exploitation.

Humboldt county has surprisingly been somewhat of a leader in environmental issues at times, and to restore our natural organisms and systems, will also bring about increased living pleasure and create attraction to the crushing city populations.

For a small rather largely rural county, Humboldt can, by creating a solar renewable power economy, contribute more than expected to reducing greenhouse gases, but ONLY if we bypass the crazed powerline/burning/and habitat conversion from natural norms to any type of mass/industrialized collection such as solar farms and wind, which themselves are too damaging to use.

We ARE urban enough to have vast rooftop area in which to generate sufficient electric power, and the transport industry is moving away from gasoline and fossil fuels - please create the new agenda and world of truly regenerative energy collection and use.

Your Community Advisory Committee is recommending that the Board adopt a goal of 100% clean, renewable electricity by 2025. The CAC's recommendation is the only way forward, away from further catastrophically damaging the area and the entire world.

thank you.

Sincerely,
Mr. Michael McLaughin
[redacted]
Eureka, CA 95502
[redacted]

Yvette St. Onge	Inbox	**Support Clean, Renewable Energy in Humboldt County** - Sheri Woo RCEA RE: Support Cl...	3:44 PM
[redacted]			
R Soxsmith	Inbox	Support Clean, Renewable Energy in Humboldt County - Sheri Woo RCEA RE: Support Cle...	3:20 PM
Deb Lincoln	Inbox	**Support Clean, Renewable Energy in Humboldt County** - Sheri Woo RCEA RE: Support Cl...	3:20 PM
Martha Herrero	Inbox	**Support Clean, Renewable Energy in Humboldt County** - Sheri Woo RCEA RE: Support Cl...	3:00 PM
Tanja Rieger	Inbox	**Support Clean, Renewable Energy in Humboldt County** - Sheri Woo RCEA RE: Support Cl...	3:00 PM
Eliette Bozzola	Inbox	**Support Clean, Renewable Energy in Humboldt County** - Sheri Woo RCEA RE: Support Cl...	2:41 PM
James Maurer	Inbox	**Support Clean, Renewable Energy in Humboldt County** - Sheri Woo RCEA RE: Support Cl...	2:36 PM
Davin Peterson	Inbox	**Support Clean, Renewable Energy in Humboldt County** - Sheri Woo RCEA RE: Support Cl...	2:27 PM
mindy maxwell	Inbox	**Support Clean, Renewable Energy in Humboldt County** - Sheri Woo RCEA RE: Support Cl...	2:25 PM
Vicky Matsui	Inbox	**Support Clean, Renewable Energy in Humboldt County** - Sheri Woo RCEA RE: Support Cl...	2:24 PM
Natalie Van Leekwij.	Inbox	**Support Clean, Renewable Energy in Humboldt County** - Sheri Woo RCEA RE: Support Cl...	2:17 PM
Joseph Shulman	Inbox	**Support Clean, Renewable Energy in Humboldt County** - Sheri Woo RCEA RE: Support Cl...	2:17 PM
Lorenz Steininger	Inbox	**Support Clean, Renewable Energy in Humboldt County** - Sheri Woo RCEA RE: Support Cl...	2:16 PM
Mary Eastman	Inbox	**Support Clean, Renewable Energy in Humboldt County** - Sheri Woo RCEA RE: Support Cl...	2:04 PM
Jody Gibson	Inbox	Support Clean, Renewable Energy in Humboldt County - Sheri Woo RCEA RE: Support Cle...	2:00 PM
[redacted]			
Lotte Larsson	1-support clean	Support Clean, Renewable Energy in Humboldt County - Sheri Woo RCEA RE: Su...	1:41 PM
KELLY WALKER	1-support clean	**Support Clean, Renewable Energy in Humboldt County** - Sheri Woo RCEA RE: Su...	1:41 PM
Kathi Ridgway	1-support clean	**Support Clean, Renewable Energy in Humboldt County** - Sheri Woo RCEA RE: Su...	1:26 PM
Stephanie Tidwell	Inbox 1-support clean	Friends of the Eel River 100% supports RCEA's transition to 100% clean e...	1:20 PM
Lori Kegler	1-support clean	**Support Clean, Renewable Energy in Humboldt County** - Sheri Woo RCEA RE: Su...	1:14 PM
Tina Colafranceschi	1-support clean	**Support Clean, Renewable Energy in Humboldt County** - Sheri Woo RCEA RE: Su...	1:10 PM
Denise Thomas	1-support clean	**Support Clean, Renewable Energy in Humboldt County** - Sheri Woo RCEA RE: Su...	1:08 PM
Roger Schmidt	1-support clean	**Support Clean, Renewable Energy in Humboldt County** - Sheri Woo RCEA RE: Su...	1:07 PM
Sara Hayes	1-support clean	**Support Clean, Renewable Energy in Humboldt County** - Sheri Woo RCEA RE: Su...	12:58 PM
Lori Vaccaro	1-support clean	**Support Clean, Renewable Energy in Humboldt County** - Sheri Woo RCEA RE: Su...	12:57 PM
Robin Hamlin	1-support clean	**Support Clean, Renewable Energy in Humboldt County** - Sheri Woo RCEA RE: Su...	12:44 PM
[redacted]			
Mal Gaff	1-support clean	**Support Clean, Renewable Energy in Humboldt County** - Sheri Woo RCEA RE: Su...	12:39 PM

Lisabette Brinkman	1-support clean	Support Clean, Renewable Energy in Humboldt County - Sheri Woo RCEA RE: Su...	12:21 PM
Toby Ann Reese	1-support clean	Support Clean, Renewable Energy in Humboldt County - Sheri Woo RCEA RE: Su...	12:13 PM
Alexandra ZARZYCKA	1-support clean	Support Clean, Renewable Energy in Humboldt County - Sheri Woo RCEA RE: Su...	12:12 PM
Ludmila Dmitriev-Od.	1-support clean	Support Clean, Renewable Energy in Humboldt County - Sheri Woo RCEA RE: Su...	12:05 PM
Mireille Urbain	1-support clean	Support Clean, Renewable Energy in Humboldt County - Sheri Woo RCEA RE: Su...	12:01 PM
Larissa Matthews	1-support clean	Support Clean, Renewable Energy in Humboldt County - Sheri Woo RCEA RE: Su...	11:57 AM
sue davies	1-support clean	Support Clean, Renewable Energy in Humboldt County - Sheri Woo RCEA RE: Su...	11:56 AM
Patricia Lotus	1-support clean	Support Clean, Renewable Energy in Humboldt County - Sheri Woo RCEA RE: Su...	11:56 AM
Denise Kastner	1-support clean	Support Clean, Renewable Energy in Humboldt County - Sheri Woo RCEA RE: Su...	11:56 AM
Robert Shearer	1-support clean	[Warning - Phish?] Support Clean, Renewable Energy in Humboldt County - She...	11:49 AM
Betina Garsen	1-support clean	Support Clean, Renewable Energy in Humboldt County - Sheri Woo RCEA RE: Su...	11:39 AM
ilia wehman	1-support clean	Support Clean, Renewable Energy in Humboldt County - Sheri Woo RCEA RE: Su...	11:37 AM
Paul Nelson	1-support clean	Support Clean, Renewable Energy in Humboldt County - Sheri Woo RCEA RE: Su...	11:36 AM
harry knapp	1-support clean	Support Clean, Renewable Energy in Humboldt County - Sheri Woo RCEA RE: Su...	11:32 AM
Carol Fusco	1-support clean	Support Clean, Renewable Energy in Humboldt County - Sheri Woo RCEA RE: Su...	11:25 AM
Sally Madigan	1-support clean	Support Clean, Renewable Energy in Humboldt County - Sheri Woo RCEA RE: Su...	11:24 AM
Randy Harrison	1-support clean	Support Clean, Renewable Energy in Humboldt County - Sheri Woo RCEA RE: Su...	11:20 AM
Elisabeth Bechmann	1-support clean	Support Clean, Renewable Energy in Humboldt County - Sheri Woo RCEA RE: Su...	11:19 AM
Amy Hansen	1-support clean	Support Clean, Renewable Energy in Humboldt County - Sheri Woo RCEA RE: Su...	10:46 AM
Mark Canright	1-support clean	Support Clean, Renewable Energy in Humboldt County - Sheri Woo RCEA RE: Su...	10:45 AM
Geraldine May	1-support clean	Support Clean, Renewable Energy in Humboldt County - Sheri Woo RCEA RE: Su...	10:43 AM
Tom McBride	1-support clean	Support Clean, Renewable Energy in Humboldt County - Sheri Woo RCEA RE: Su...	10:40 AM
Kristen Renton	1-support clean	Support Clean, Renewable Energy in Humboldt County - Sheri Woo RCEA RE: Su...	10:40 AM
Mark Takaro	1-support clean	Support Clean, Renewable Energy in Humboldt County - Sheri Woo RCEA RE: Su...	10:32 AM
Yvonne Fast	1-support clean	Support Clean, Renewable Energy in Humboldt County - Sheri Woo RCEA RE: Su...	10:30 AM
Eliot Tigerlily	1-support clean	Support Clean, Renewable Energy in Humboldt County - Sheri Woo RCEA RE: Su...	10:25 AM
Mary Shabbott	1-support clean	Support Clean, Renewable Energy in Humboldt County - Sheri Woo RCEA RE: Su...	10:18 AM
Brennan Lagasse	1-support clean	Support Clean, Renewable Energy in Humboldt County - Sheri Woo RCEA RE: Su...	10:18 AM
Abe Levy	1-support clean	Support Clean, Renewable Energy in Humboldt County - Sheri Woo RCEA RE: Su...	10:18 AM
e p	1-support clean	Support Clean, Renewable Energy in Humboldt County - Sheri Woo RCEA RE: Su...	10:17 AM
Vernon Batty	1-support clean	Support Clean, Renewable Energy in Humboldt County - Sheri Woo RCEA RE: Su...	10:16 AM
Rick Huyett	1-support clean	Support Clean, Renewable Energy in Humboldt County - Sheri Woo RCEA RE: Su...	10:05 AM
Vic Bostock	1-support clean	Support Clean, Renewable Energy in Humboldt County - Sheri Woo RCEA RE: Su...	10:05 AM
Karl Koessel	1-support clean	Support Clean, Renewable Energy in Humboldt County - Sheri Woo RCEA RE: Su...	9:58 AM
David Beard	1-support clean	Support Clean, Renewable Energy in Humboldt County - Sheri Woo RCEA RE: Su...	9:57 AM

Cary Frazee	1-support clean	**Support Clean, Renewable Energy in Humboldt County** - Sheri Woo RCEA RE: Su...	9:56 AM
Kate Kenner	1-support clean	**Support Clean, Renewable Energy in Humboldt County** - Sheri Woo RCEA RE: Su...	9:55 AM
James Donald	1-support clean	**Support Clean, Renewable Energy in Humboldt County** - Sheri Woo RCEA RE: Su...	9:52 AM
Mari Dominguez	1-support clean	**Support Clean, Renewable Energy in Humboldt County** - Sheri Woo RCEA RE: Su...	9:49 AM
K R	1-support clean	**Support Clean, Renewable Energy in Humboldt County** - Sheri Woo RCEA RE: Su...	9:44 AM
Lawrence Thompson	1-support clean	**Support Clean, Renewable Energy in Humboldt County** - Sheri Woo RCEA RE: Su...	9:43 AM
myriam bois	1-support clean	**Support Clean, Renewable Energy in Humboldt County** - Sheri Woo RCEA RE: Su...	9:38 AM
David Rosenstein	1-support clean	**Support Clean, Renewable Energy in Humboldt County** - Sheri Woo RCEA RE: Su...	9:36 AM
Louise Lieb	1-support clean	**Support Clean, Renewable Energy in Humboldt County** - Sheri Woo RCEA RE: Su...	9:31 AM
chris ocean	1-support clean	**Support Clean, Renewable Energy in Humboldt County** - Sheri Woo RCEA RE: Su...	9:28 AM
Samuel Durkin	1-support clean	**Support Clean, Renewable Energy in Humboldt County** - Sheri Woo RCEA RE: Su...	9:22 AM
Sheila Desmond	1-support clean	**Support Clean, Renewable Energy in Humboldt County** - Sheri Woo RCEA RE: Su...	9:18 AM
Robert McCombs	1-support clean	**Support Clean, Renewable Energy in Humboldt County** - Sheri Woo RCEA RE: Su...	9:05 AM
George F. Klipfel I.	1-support clean	**Support Clean, Renewable Energy in Humboldt County** - Sheri Woo RCEA RE: Su...	9:03 AM
Glen Colwell	1-support clean	**Support Clean, Renewable Energy in Humboldt County** - Sheri Woo RCEA RE: Su...	9:02 AM
Karynn Merkel	1-support clean	**Support Clean, Renewable Energy in Humboldt County** - Sheri Woo RCEA RE: Su...	8:59 AM
Jeannie Pollak	1-support clean	**Support Clean, Renewable Energy in Humboldt County** - Sheri Woo RCEA RE: Su...	8:58 AM
Gail Roberts	1-support clean	**Support Clean, Renewable Energy in Humboldt County** - Sheri Woo RCEA RE: Su...	8:56 AM
Astrid Keup	1-support clean	**Support Clean, Renewable Energy in Humboldt County** - Sheri Woo RCEA RE: Su...	8:53 AM
Melinda Groom	1-support clean	**Support Clean, Renewable Energy in Humboldt County** - Sheri Woo RCEA RE: Su...	8:49 AM
Claudia Correia	1-support clean	**Support Clean, Renewable Energy in Humboldt County** - Sheri Woo RCEA RE: Su...	8:44 AM
Karin Rachel Anders.	1-support clean	**Support Clean, Renewable Energy in Humboldt County** - Sheri Woo RCEA RE: Su...	8:41 AM
Norman Dyche	1-support clean	**Support Clean, Renewable Energy in Humboldt County** - Sheri Woo RCEA RE: Su...	8:40 AM
CAROL COLLINS	1-support clean	**Support Clean, Renewable Energy in Humboldt County** - Sheri Woo RCEA RE: Su...	8:38 AM
Shelley Hartz	1-support clean	**Support Clean, Renewable Energy in Humboldt County** - Sheri Woo RCEA RE: Su...	8:38 AM
Nathan Vogel	1-support clean	**Support Clean, Renewable Energy in Humboldt County** - Sheri Woo RCEA RE: Su...	8:33 AM
Kelly Brannigan	1-support clean	**Support Clean, Renewable Energy in Humboldt County** - Sheri Woo RCEA RE: Su...	8:28 AM
Harry Blumenthal	1-support clean	**Support Clean, Renewable Energy in Humboldt County** - Sheri Woo RCEA RE: Su...	8:17 AM
Linda Bescript	1-support clean	**Support Clean, Renewable Energy in Humboldt County** - Sheri Woo RCEA RE: Su...	8:15 AM
Douglas Snyder	1-support clean	**Support Clean, Renewable Energy in Humboldt County** - Sheri Woo RCEA RE: Su...	8:14 AM
Michael Sarabia	1-support clean	**Support Clean, Renewable Energy in Humboldt County** - Sheri Woo RCEA RE: Su...	8:13 AM
Molly Huddleston	1-support clean	**Support Clean, Renewable Energy in Humboldt County** - Sheri Woo RCEA RE: Su...	8:13 AM
Ann Kuter	1-support clean	**Support Clean, Renewable Energy in Humboldt County** - Sheri Woo RCEA RE: Su...	8:11 AM
Angelina Coriandoli	1-support clean	**Support Clean, Renewable Energy in Humboldt County** - Sheri Woo RCEA RE: Su...	8:11 AM
sandra albo	1-support clean	**Support Clean, Renewable Energy in Humboldt County** - Sheri Woo RCEA RE: Su...	8:03 AM
Tami Palacky	1-support clean	**Support Clean, Renewable Energy in Humboldt County** - Sheri Woo RCEA RE: Su...	8:00 AM
Alan Gonzalez	1-support clean	**Support Clean, Renewable Energy in Humboldt County** - Sheri Woo RCEA RE: Su...	8:00 AM
Lorna Wallach	1-support clean	**Support Clean, Renewable Energy in Humboldt County** - Sheri Woo RCEA RE: Su...	7:59 AM
Joe Na	1-support clean	**Support Clean, Renewable Energy in Humboldt County** - Sheri Woo RCEA RE: Su...	7:59 AM
Rosario Cosimo	1-support clean	**Support Clean, Renewable Energy in Humboldt County** - Sheri Woo RCEA RE: Su...	7:58 AM
janet maker	1-support clean	**Support Clean, Renewable Energy in Humboldt County** - Sheri Woo RCEA RE: Su...	7:54 AM
Petra Bingham	1-support clean	**Support Clean, Renewable Energy in Humboldt County** - Sheri Woo RCEA RE: Su...	7:52 AM
Joseph Alvarado	1-support clean	**Support Clean, Renewable Energy in Humboldt County** - Sheri Woo RCEA RE: Su...	7:48 AM
Heidi Parvela	1-support clean	**Support Clean, Renewable Energy in Humboldt County** - Sheri Woo RCEA RE: Su...	7:45 AM
Carroll Arkema	1-support clean	**Support Clean, Renewable Energy in Humboldt County** - Sheri Woo RCEA RE: Su...	7:45 AM

Ann Rennacker	1-support clean	**Support Clean, Renewable Energy in Humboldt County** - Sheri Woo R...	
Jeanette Holmgren	1-support clean	**Support Clean, Renewable Energy in Humboldt County** - Sheri Woo RCEA RE: Su...	7:44 AM
Bruce Donnell	1-support clean	**Support Clean, Renewable Energy in Humboldt County** - Sheri Woo RCEA RE: Su...	7:42 AM
Jay Moller	1-support clean	**Support Clean, Renewable Energy in Humboldt County** - Sheri Woo RCEA RE: Su...	7:37 AM
Lorraine Lowry	Inbox	**Support Clean, Renewable Energy in Humboldt County** - Sheri Woo RCEA RE: Support Cl...	7:37 AM
Deborah Spencer	Inbox	**Support Clean, Renewable Energy in Humboldt County** - Sheri Woo RCEA RE: Support Cl...	7:37 AM
A. Todd	Inbox	**Support Clean, Renewable Energy in Humboldt County** - Sheri Woo RCEA RE: Support Cl...	7:37 AM
Lasha Wells	Inbox	**Support Clean, Renewable Energy in Humboldt County** - Sheri Woo RCEA RE: Support Cl...	7:30 AM
Lawrence Jimenez	Inbox	**Support Clean, Renewable Energy in Humboldt County** - Sheri Woo RCEA RE: Support Cl...	7:30 AM
Kristin Lewis	Inbox	**Support Clean, Renewable Energy in Humboldt County** - Sheri Woo RCEA RE: Support Cl...	7:30 AM
Marcy Gordon	Inbox	**Support Clean, Renewable Energy in Humboldt County** - Sheri Woo RCEA RE: Support Cl...	7:29 AM
Sam Waldman	Inbox	**Support Clean, Renewable Energy in Humboldt County** - Sheri Woo RCEA RE: Support Cl...	7:28 AM
Paul Ramos	Inbox	**Support Clean, Renewable Energy in Humboldt County** - Sheri Woo RCEA RE: Support Cl...	7:27 AM
jodi Rodar	Inbox	**Support Clean, Renewable Energy in Humboldt County** - Sheri Woo RCEA RE: Support Cl...	7:27 AM
Jeffrey Kline	Inbox	**Support Clean, Renewable Energy in Humboldt County** - Sheri Woo RCEA RE: Support Cl...	7:23 AM
Pat Blackwell-March.	Inbox	**Support Clean, Renewable Energy in Humboldt County** - Sheri Woo RCEA RE: Support Cl...	7:22 AM
Dennis Ledden	Inbox	**Support Clean, Renewable Energy in Humboldt County** - Sheri Woo RCEA RE: Support Cl...	7:21 AM
dale riehart	Inbox	**Support Clean, Renewable Energy in Humboldt County** - Sheri Woo RCEA RE: Support Cl...	7:20 AM
Karen and Jeff Hay	Inbox	**Support Clean, Renewable Energy in Humboldt County** - Sheri Woo RCEA RE: Support Cl...	7:19 AM
Lacey Hicks	Inbox	**Support Clean, Renewable Energy in Humboldt County** - Sheri Woo RCEA RE: Support Cl...	7:19 AM
Nat Chilas	Inbox	**Support Clean, Renewable Energy in Humboldt County** - Sheri Woo RCEA RE: Support Cl...	7:18 AM
Lacey Levitt	Inbox	**Support Clean, Renewable Energy in Humboldt County** - Sheri Woo RCEA RE: Support Cl...	7:17 AM
Caroline Sévilla	Inbox	**Support Clean, Renewable Energy in Humboldt County** - Sheri Woo RCEA RE: Support Cl...	7:16 AM
Bruce Hlodnicki	Inbox	**Support Clean, Renewable Energy in Humboldt County** - Sheri Woo RCEA RE: Support Cl...	7:14 AM
Ron Melin	Inbox	**Support Clean, Renewable Energy in Humboldt County** - Sheri Woo RCEA RE: Support Cl...	7:12 AM
Georgia Brewer	Inbox	**Support Clean, Renewable Energy in Humboldt County** - Sheri Woo RCEA RE: Support Cl...	7:11 AM
Lynn Barton	Inbox	**Support Clean, Renewable Energy in Humboldt County** - Sheri Woo RCEA RE: Support Cl...	7:11 AM
Nic Duon	Inbox	**Support Clean, Renewable Energy in Humboldt County** - Sheri Woo RCEA RE: Support Cl...	7:10 AM
Jennifer Miller	Inbox	**Support Clean, Renewable Energy in Humboldt County** - Sheri Woo RCEA RE: Support Cl...	7:07 AM
James R Monroe	Inbox	**Support Clean, Renewable Energy in Humboldt County** - Sheri Woo RCEA RE: Support Cl...	7:07 AM
julie schampel	Inbox	**Support Clean, Renewable Energy in Humboldt County** - Sheri Woo RCEA RE: Support Cl...	7:07 AM
Miranda Edison	Inbox	**Support Clean, Renewable Energy in Humboldt County** - Sheri Woo RCEA RE: Support Cl...	7:07 AM
Scott Gibson	Inbox	**Support Clean, Renewable Energy in Humboldt County** - Sheri Woo RCEA RE: Support Cl...	7:07 AM
Gary G Hughes	Inbox	Support Clean, Renewable Energy in Humboldt County - Biomass Energy is not Renewable -	Feb 20
Christine Stewart		**Support Clean, Renewable Energy in Humboldt County** - Sheri Woo RCEA RE: Support Clean, Re...	4:05 PM
les roberts		**Support Clean, Renewable Energy in Humboldt County** - Sheri Woo RCEA RE: Support Clean, Re...	4:05 PM
Jelica Roland		**Support Clean, Renewable Energy in Humboldt County** - Sheri Woo RCEA RE: Support Clean, Re...	4:03 PM
Ryan Acebo		**Support Clean, Renewable Energy in Humboldt County** - Sheri Woo RCEA RE: Support Clean, Re...	4:03 PM
Christa Neuber		**Support Clean, Renewable Energy in Humboldt County** - Sheri Woo RCEA RE: Support Clean, Re...	3:58 PM

James R Brown	Inbox	**Support Clean, Renewable Energy in Humboldt County** - Sheri Woo RCEA RE: Support Cl...	Feb 21
Don McKelvey	Inbox	**Support Clean, Renewable Energy in Humboldt County** - Sheri Woo RCEA RE: Support Cl...	Feb 21
Ken Ward	Inbox	**Support Clean, Renewable Energy in Humboldt County** - Sheri Woo RCEA RE: Support Cl...	Feb 21
maureen roche	Inbox	**Support Clean, Renewable Energy in Humboldt County** - Sheri Woo RCEA RE: Support Cl...	Feb 21
Celeste Anacker	Inbox	**Support Clean, Renewable Energy in Humboldt County** - Sheri Woo RCEA RE: Support Cl...	Feb 21
Ken Greenwald	Inbox	**Support Clean, Renewable Energy in Humboldt County** - Sheri Woo RCEA RE: Support Cl...	Feb 21
Brant Kotch	Inbox	**Support Clean, Renewable Energy in Humboldt County** - Sheri Woo RCEA RE: Support Cl...	Feb 21
Christine Stewart	Inbox	**Support Clean, Renewable Energy in Humboldt County** - Sheri Woo RCEA RE: Support Cl...	Feb 21
les roberts	Inbox	**Support Clean, Renewable Energy in Humboldt County** - Sheri Woo RCEA RE: Support Cl...	Feb 21
Jelica Roland	Inbox	**Support Clean, Renewable Energy in Humboldt County** - Sheri Woo RCEA RE: Support Cl...	Feb 21
Ryan Acebo	Inbox	**Support Clean, Renewable Energy in Humboldt County** - Sheri Woo RCEA RE: Support Cl...	Feb 21
Christa Neuber	Inbox	**Support Clean, Renewable Energy in Humboldt County** - Sheri Woo RCEA RE: Support Cl...	Feb 21

Judy Rees	Inbox	Support Clean, Renewable Energy in Humboldt County - Sheri Woo RCEA RE: Support Cle...	Feb 21
Tim howard	Inbox	Support Clean, Renewable Energy in Humboldt County - Sheri Woo RCEA RE: Support Cle...	Feb 21
Hilarie Ericson	Inbox	**Support Clean, Renewable Energy in Humboldt County** - Sheri Woo RCEA RE: Support Cl...	Feb 21
Keiko Barrett	Inbox	**Support Clean, Renewable Energy in Humboldt County** - Sheri Woo RCEA RE: Support Cl...	Feb 21
Andrea Lewis	Inbox	**Support Clean, Renewable Energy in Humboldt County** - Sheri Woo RCEA RE: Support Cl...	Feb 21
Maureen O'Neal	Inbox	**Support Clean, Renewable Energy in Humboldt County** - Sheri Woo RCEA RE: Support Cl...	Feb 21
Maureen O'Neal	Inbox	**Support Clean, Renewable Energy in Humboldt County** - Sheri Woo RCEA RE: Support Cl...	Feb 21
Bonnie Dombrowski	Inbox	**Support Clean, Renewable Energy in Humboldt County** - Sheri Woo RCEA RE: Support Cl...	Feb 21
Marc Kiefer	Inbox	**Support Clean, Renewable Energy in Humboldt County** - Sheri Woo RCEA RE: Support Cl...	Feb 21
John Stewart	Inbox	**Support Clean, Renewable Energy in Humboldt County** - Sheri Woo RCEA RE: Support Cl...	Feb 21
George Inotowok	Inbox	**Support Clean, Renewable Energy in Humboldt County** - Sheri Woo RCEA RE: Support Cl...	Feb 21
Kate Robinson	Inbox	**Support Clean, Renewable Energy in Humboldt County** - Sheri Woo RCEA RE: Support Cl...	Feb 21
Heather Ruckman	Inbox	**Support Clean, Renewable Energy in Humboldt County** - Sheri Woo RCEA RE: Support Cl...	Feb 21
Jon Anderholm	Inbox	**Support Clean, Renewable Energy in Humboldt County** - Sheri Woo RCEA RE: Support Cl...	Feb 21
Amy Harlib	Inbox	**Support Clean, Renewable Energy in Humboldt County** - Sheri Woo RCEA RE: Support Cl...	Feb 21
Mark M Giese	Inbox	**Support Clean, Renewable Energy in Humboldt County** - Sheri Woo RCEA RE: Support Cl...	Feb 21
Paul Norup	Inbox	**Support Clean, Renewable Energy in Humboldt County** - Sheri Woo RCEA RE: Support Cl...	Feb 21
Dawn Hendry	Inbox	**Support Clean, Renewable Energy in Humboldt County** - Sheri Woo RCEA RE: Support Cl...	Feb 21

Gisèle Albertine	Inbox	**Support Clean, Renewable Energy in Humboldt County** - Sheri Woo RCEA RE: Support Cl...	9:10 AM
Ariana King	Inbox	**Support Clean, Renewable Energy in Humboldt County** - Sheri Woo RCEA RE: Support Cl...	6:37 AM
Nancy Chismar	Inbox	**Support Clean, Renewable Energy in Humboldt County** - Sheri Woo RCEA RE: Support Cl...	6:04 AM
Magaly Léger	Inbox	**Support Clean, Renewable Energy in Humboldt County** - Sheri Woo RCEA RE: Support Cl...	5:53 AM
Tracey Kleber	Inbox	**Support Clean, Renewable Energy in Humboldt County** - Sheri Woo RCEA RE: Support Cl...	4:52 AM
Sylwia Zielinska	Inbox	**Support Clean, Renewable Energy in Humboldt County** - Sheri Woo RCEA RE: Support Cl...	4:14 AM
Jennifer Sellers	Inbox	**Please Support Clean, Renewable Energy in Humboldt County** - Sheri Woo RCEA RE: Ple...	1:36 AM
ISABEL CERVERA	Inbox	**Support Clean, Renewable Energy in Humboldt County** - Sheri Woo RCEA RE: Support Cl...	1:16 AM
ISABEL CERVERA	Inbox	**Support Clean, Renewable Energy in Humboldt County** - Sheri Woo RCEA RE: Support Cl...	1:13 AM
Shubra Sachdev	Inbox	**Support Clean, Renewable Energy in Humboldt County** - Sheri Woo RCEA RE: Support Cl...	11:55 PM
Christopher Panayi	Inbox	**Support Clean, Renewable Energy in Humboldt County** - Sheri Woo RCEA RE: Support Cl...	10:54 PM
Silvia Bertano	Inbox	**Support Clean, Renewable Energy in Humboldt County** - Sheri Woo RCEA RE: Support Cl...	10:53 PM
Lauren Schiffman	Inbox	**Support Clean, Renewable Energy in Humboldt County** - Sheri Woo RCEA RE: Support Cl...	10:33 PM
Peter Lee	Inbox	**Support Clean, Renewable Energy in Humboldt County** - Sheri Woo RCEA RE: Support Cl...	10:25 PM
Vincent Rubino	Inbox	**Support Clean, Renewable Energy in Humboldt County** - Sheri Woo RCEA RE: Support Cl...	9:44 PM
Marlen Hdz.	Inbox	**Support Clean, Renewable Energy in Humboldt County** - Sheri Woo RCEA RE: Support Cl...	9:38 PM
Laura Hanks	Inbox	**Support Clean, Renewable Energy in Humboldt County** - Sheri Woo RCEA RE: Support Cl...	9:11 PM

Public Comment
Agenda Item #11.1
100% Clean
& Renewable
By 2025 Goal

From:	Matthew Marshall
To:	Lori Taketa
Cc:	Richard Engel; Dana Boudreau
Subject:	FW: Support Clean, Renewable Energy in Humboldt County
Date:	Wednesday, February 27, 2019 11:10:44 AM

-----Original Message-----
From: O. Smith [redacted]
Sent: Tuesday, February 26, 2019 4:26 PM
To: Matthew Marshall [redacted]
Subject: Support Clean, Renewable Energy in Humboldt County

Matthew Marshall
RCEA

RE: Support Clean, Renewable Energy in Humboldt County

null

Dear RCEA Board Members:

I fully support the RCEA Board adopting the official goal of providing 100% clean, renewable energy to Humboldt County by 2025.

As you all know, we are already experiencing the beginning of our global climate crisis.
Yet, even at this time of looming irreparable consequences, it is truly very hard for all of us to change our habits. We need every choice available for clean energy. I urge the Board to continue to be champions for clean, renewable energy, and adopt the official goal of providing 100% clean, renewable energy to Humboldt County by 2025.

Please set an example of leadership that is responding to the global climate crisis with a sense of urgency. Hopefully, other boards, commissions, elected officials, and agency staff will take cues from you and follow suit, today, not later.

I am grateful for our Community Choice Energy program, and am a proud REpower+ ratepayer. Thank you.

Sincerely,
Oona Smith

Arcata, CA

From:	Lynne Abels
To:	Lori Taketa
Subject:	renewable energy
Date:	Wednesday, February 27, 2019 4:33:47 PM

I urge you to commit toward a clean energy resolution to move toward 100% renewables. I was surprised (and dismayed)to learn that our local energy has come in part from bio fuels. We need to stop burning carbon and this is a step backwards. I understand that part of the logic is to provide local truckers with work. That is laudable but I support providing work that is "right livelyhood" ie beneficial and useful not harmful. We will not be successful as a community or as a country unless we engage in creative ways with the future that is so rapidly approaching.

Thanks for all your work for us, Lynne Abels, Arcata

Meredith Morehead

From: Carol Mone
Sent: Monday, February 25, 2019 1:24 PM
To: Matthew Marshall
Subject: Support Clean, Renewable Energy in Humboldt County

Matthew Marshall
RCEA

RE: Support Clean, Renewable Energy in Humboldt County

null

Dear RCEA Board Members:
I hope that you will take action at the February 28, 2019, meeting to adopt the official goal of providing 100% clean, renewable energy to Humboldt County by 2025.
We all know that we are facing a global climate crisis. Locally, this could mean sealevel rise, and more frequent and more severe droughts and wildfires.
One of the biggest sources of greenhouse gas emissions is electricity generation. Now more carbon-free electricity sources are becoming cost-competitive with fossil fuels.Fortunately, in Humboldt County, the community can express its energy priorities directly through the Community Choice Energy program administered by RCEA.
RCEA is already successfully providing cleaner electricity to Humboldt County consumers at lower rates than PG&E. Your Community Advisory Committee is recommending that the Board adopt a goal of 100% clean, renewable electricity by 2025. The CAC's recommendation is both reasonable and ambitious. With good planning and the right priorities, RCEA can achieve the community's goals for clean and renewable energy while still charging competitive rates to consumers.
Please adopt the CAC's recommendations and help move Humboldt County to a clean energy future.
Sincerely,

Sincerely,
Ms. Carol Mone

Trinidad, CA 95570

Meredith Morehead

From: Joyce King <
Sent: Saturday, February 23, 2019 8:51 PM
To: Matthew Marshall
Subject: Support Clean, Renewable Energy in Humboldt County

Matthew Marshall
RCEA

RE: Support Clean, Renewable Energy in Humboldt County

null

Dear RCEA Board Members:
Please adopt the official goal of providing 100% clean, renewable energy to Humboldt County by 2025.

Our greenhouse gas emissions are creating a global climate crisis threatening us with catastrophic sea level rise, droughts and wildfires. And one of the biggest sources of greenhouse gas emissions is electricity generation.

Humboldt County can help confront this crisis through expansion of RCEA's Community Choice Energy program to 100% clean, renewable electricity by 2025.

Please adopt the CAC's recommendations and help move Humboldt County to the forefront of a clean energy future.
Sincerely,
Joyce King

Sincerely,
Ms. Joyce King

McKinleyville, CA 95519

Sample Standard Email

From: Sheri L Woo
To: Lori Taketa; Richard Engel
Subject: Fwd: Support Clean, Renewable Energy in Humboldt County
Date: Sunday, February 24, 2019 7:34:10 AM

---------- Forwarded message ---------
From: **Magdalena Borkowska**
Date: Sun, Feb 24, 2019, 4:58 AM
Subject: Support Clean, Renewable Energy in Humboldt County
To:

Sheri Woo
RCEA

RE: Support Clean, Renewable Energy in Humboldt County

null

Dear RCEA Board Members:
I'm writing to urge you take action at your meeting on February 28, 2019, and adopt the official goal of providing 100% clean, renewable energy to Humboldt County by 2025.
We are facing a global climate crisis. Locally, the effects of the climate crisis include potentially catastrophic sea level rise, along with an increase in the number and severity of droughts and wildfires. But we aren't just affected by climate change; we're also helping to cause it. And one of the biggest sources of greenhouse gas emissions is electricity generation.
Fortunately, we live in a time when many carbon-free electricity sources are becoming cost-competitive with dirty fossil fuels. And we live in a place, Humboldt County, where the community can express its energy priorities directly through the Community Choice Energy program administered by RCEA.
RCEA is already successfully providing cleaner electricity to Humboldt County consumers at lower rates than PG&E. But the climate crisis demands that we take more ambitious action.
Your Community Advisory Committee is recommending that the Board adopt a goal of 100% clean, renewable electricity by 2025. The CAC's recommendation is both reasonable and ambitious. With good planning and the right priorities, RCEA can achieve the community's goals for clean and renewable energy while still charging competitive rates to consumers.
Please adopt the CAC's recommendations and help move Humboldt County to a clean energy future.
Sincerely,

Sincerely,
Ms. Magdalena Borkowska
Stockholm, ot 12939

Emails received by Executive Director Matthew Marshall, local senders highlighted

Redwood Coast Energy Authority
Public Campaign: "100% Clean Energy by 2025"

	Submitter	Submitter City
1	Mr. Paul Ramos	Santa Ynez, CA
2	Dr. Lacey Levitt	San Diego, CA
3	Mr. Dennis Ledden	Fiddletown, CA
4	Mrs. Miranda Edison	Worthington, MA
5	Ms. Georgia Brewer	Sherman Oaks, CA
6	Mr. Ron Melin	Trinidad, CA
7	Dr. jodi Rodar	Springfield, MA
8	Mr. Jeffrey Kline	San Francisco, CA
9	Mrs. Kristin Lewis	Stafford, TX
10	Ms. Lasha Wells	Saint Petersburg, FL
11	Ms. A. Todd	Eugene, OR
12	Mr. Dana Craig	Norwood, MA
13	Mr. Jay Moller	Redway, CA
14	Ms. Jeanette Holmgren	Strömsegatan Boden, Sweden
15	Ms. Beverly Filip	Eureka, CA
16	Ms. Karla Devine	Manhattan Beach, CA
17	Miss. Tami Palacky	Springfield, VA
18	Mrs. Melinda Groom	blue lake, CA
19	Mrs. Mari Dominguez	Linden, CA
20	Mr. Joseph Alvarado	San Francisco, CA
21	Ms. Urmila Padmanabhan	Fremont, CA 9453
22	Mr. Joe Na	Arcata, CA 95521
23	Mr. Kermit Cuff	Mountain View, CA 94041
24	Mrs. Petra Bingham	Arcata, CA 95521
25	Dr. Kelly Dunn	Aliso, CA 92656
26	Mrs. Lorna Wallach	Boynton beach, FL 33437
27	Mrs. Shelley Hartz	Littleton, MA 01460
28	Mr. James Donald	Markleeville, CA 96120
29	Ms. Linda Bescript	Langhorne, PA 19047
30	Mr. Douglas Snyder	Laguna Beach, CA 92651
31	Mrs. Gail Roberts	Tecate, CA 91980
32	Ms. Jeannie Pollak	Oxnard, CA 93036
33	Mr. bernard hochendoner	Patterson, CA 95363
34	Dr. Lawrence Thompson	Livermore, CA 94550
35	Mr. David Rosenstein	Santa Monica, CA 90403
36	Ms. Kate Kenner	Guilford, VT 05301
37	Mr. David Beard	Eureka, CA 95503
38	Ms. e p	talmage, CA 95481
39	Dr. James Klein	Corpus Christi, TX 78411
40	Mr. Vernon Batty	Pagosa Springs, CO 81147
41	Mr. Mark Takaro	Berkeley, CA 94702
42	Miss. myriam bois	VOLONNE, ot 04290
43	Mrs. Geraldine May	Creston, CA 93432

44	Mr. Karl Koessel	Mckinleyville, CA 95519
45	Ms. Ann Thompson	Crescent City, CA 95531
46	Mr. Mark Canright	Asbury, NJ 08802
47	Ms. Alexandra ZARZYCKA	BROOKLYN, NY 11236
48	Ms. Valeriya Efimova	Jersey City, NJ 07302
49	Mrs. Ludmila Dmitriev-Odier	Stillwater, OK 74075
50	Ms. Yvonne Fast	Aalborg, ot 90000
51	Mr. Paul Nelson	Twain Harte, CA 95383
52	Ms. Carol Fusco	Berkeley, CA 94708
53	Ms. Denise Thomas	West St Paul, MN 55118
54	Ms. Larissa Matthews	Plainview, NY 11803
55	Ms. Amy Hansen	Asbury, NJ 08802
56	Mr. ted fishman	San Jose, CA 95123
57	Ms. Brandie Deal	Bothell, WA 98021
58	Mrs. fay forman	New York, NY 10001
59	Ms. sue davies	philo, CA 95466
60	Ms. Deb Lincoln	Urbandale, IA 50322
61	Ms. Sara Hayes	Long Beach, CA 90814
62	Mr. Mal Gaff	Lompoc, CA 93436
63	Ms. carol Coons	Prineville, OR 97754
64	Mrs. Lori Kegler	San Pedro, CA 90731
65	Ms. Lisabette Brinkman	Santa Barbara, CA 93101
66	Ms. Robin Hamlin	McKinleyville, CA 95519
67	Mr. Noah Schillo	Reno, NV 89521
68	Ms. Christa Neuber	West Hollywood, CA 90069
69	Miss. KELLY WALKER	COLUMBIA, TN 38401
70	Miss. Tina Colafranceschi	Whitethorn, CA 95589
71	Miss. mindy maxwell	CAMBRIDGE, MA 02138
72	Ms. Natalie Van Leekwijck	Hazard, NE 68844
73	Mrs. Eliette Bozzola	Muël, ot 35290
74	Mr. Davin Peterson	Eureka, CA 95501
75	Mr. Ken Ward	Gloversville, NY 12078
76	Ms. Joann Koch	Lebanon, CT 06249
77	Mr. les roberts	fresno, CA 93704
78	Mr. Ken Greenwald	Santa Monica, CA 90404
79	Ms. Celeste Anacker	Santa Barbara, CA 93105
80	Ms. Jennifer Green	Birmingham, AL 35235
81	Mr. Don McKelvey	Euclid, OH 44123
82	Mr. James R Brown	Los Angeles, CA 90034
83	Ms. Elaine Alfaro	Felton, CA 95018
84	Ms. Kim Tran	Santa Ana, CA 92707
85	Mrs. Heather Ruckman	Wellsburg, WV 26070
86	Ms. Lorretta Marcel	San Francisco, CA 94134
87	Ms. Kate Robinson	Anaheim, CA 92801
88	Dr. George Inotowok	Eureka, CA 95501
89	Ms. Maureen O'Neal	Portland, OR 97223
90	Ms. Keiko Barrett	National City, CA 91950

91	Ms. Sarah Alvarez	Torrance, CA 90505
92	Mr. Vincent Rubino	Albany, CA 94706
93	Mr. Christopher Panayi	NY, NY 10007
94	Miss. Mona Khoury	Beirut, ot 40010
95	Ms. Joanna Welch	Eureka, CA 95501
96	Mrs. Shubra Sachdev	Manila, NY 1202
97	Ms. Tracey Kleber	Los Angeles, CA 90049
98	Mrs. Magaly Léger	Callian, ID 83440
99	Ms. Gisèle Albertine	Arcata, CA 95518
100	Mrs. carrie west	muncie, IN 47303
101	Mr. Jon Spitz	Laytonville, CA 95454
102	Mr. Donald Williams	Somerville, MA 02144
103	Ms. carol lee	Eureka, CA 95503
104	Ms. M. Scileppi	San Francisco, CA 94132
105	Ms. janet forman	new york, NY 10011
106	Mrs. Petra Bingham	Arcata, CA 95521
107	Ms. Jamie Green	Ventura, CA 93004
108	Ms. Joyce King	McKinleyville, CA 95519
109	Ms. H. Guh	Addison, TX 75001
110	Ms. Erin Rowe	arcata, CA 95521
111	Dr. Wendy Ring	Bayside, CA 95524
112	Ms. Linda Doerflinger	McKinleyville, CA 95519
113	Ms. Margaret Stofsky	Eureka, CA 95503
114	Ms. Esther Garvett	Miami, FL 33186
115	Ms. Julia Adkins	Napa, CA 94559
116	Ms. Polly Savoie	Carlotta, CA 95528
117	Ms. marylen kincer	shelby twp., MI 48316
118	Mr. Kirk Lumpkin	El Cerrito, CA 94530
119	Ms. Carol Mone	Trinidad, CA 95570
120	Mr. Ken Miller	McKinleyville, CA 95519
121	Mr. John Walton	Gualala, CA 95445
122	Mrs. konstantina balaska	thessaloniki, ot 54249
123	Ms. Julia Schebach	Kritzendorf, ot 3420
124	Mrs. Joyce Coe	Hastings, MI 49058
125	Mrs. Angelika Engels	Berlin, ot 12437
126	Ms. Christine Hayes	Upland, CA 91786
127	Ms. Michele Villeneuve	Kingsport, TN 37660
128	Ms. Gail Coonen	Eureka, CA 95503
129	Ms. Cindy Belleau	Forestville, CA 95436
130	Ms. Barrie Stebbings	Bolinas, CA 94970
131	Ms. Sandra Materi	Casper, WY 82604
132	Mr. Wyman Whipple	Dahinda, IL 61428
133	Ms. Magdalena Borkowska	Stockholm, ot 12939
134	Mrs. Elisenda Toda	Girona, ot 17007
135	Ms. Melissa Hastings	Newport, NC 28570
136	Miss. Tineke Pedroni	ARCATA, CA 95521
137	Mr. MARTY BOSTIC	LA, CA 90025

138	Mr. John Zuehlke	Sherman Oaks, CA 91401
139	Mrs. Suzanne Menne	Camarillo, CA 93010
140	Ms. Katie Wilklow	Nevada City, CA 95959
141	Mrs. Petra Jaerling	Cologne, ot 50939
142	Mr. Steve SMITH	washington, DC 20560
143	Mr. jon lo	Aptos, CA 95001
144	Ms. Karen Ratzlaff	Santa Rosa, CA 95404
145	Ms. Felicia Dale	Tulalip, WA 98271
146	Ms. Anita Wisch	Valencia, CA 91355
147	Mrs. mary Casabona	fort bragg, CA 95437
148	Ms. Mary Johannsen	Minneapolis, MN 55411
149	Mr. Philip Ratcliff	Salem, OR 97302
150	Ms. Bonnie MacRaith	Arcata, CA 95521
151	Ms. Marsha Lowry	El Sobrante, CA 94803
152	Mrs. Susan Thurairatnam	N. Olmsted, OH 44070
153	Ms. cheryl watters	daytona beach, FL 32114
154	Ms. Whitney Watters	Saint Augustine, FL 32084
155	Ms. Asano Fertig	Berkeley, CA 94702
156	Mrs. Juliet Pearson	Kailua Honolulu County, HI 96734
157	Mr. Marco Pardi	Lawrenceville, GA 30043
158	Mr. robert cobb	knoxville, TN 37934
159	Mrs. Diane Kent	Phoenix, AZ 85032
160	Ms. Dea Smith	Loveland, CO 80538
161	Miss. Dawn Mason	Pottsville, PA 17901
162	Mr. Mark Bastian	Helston, ot TR12 6RA
163	Ms. heidi ahlstrand	Owatonna, MN 55060
164	Ms. Ariana King	Middletown, CA 95461
165	Mr. Henry Kruger	Eureka, CA 95501
166	Ms. Nancy Chismar	Edison, NJ 08817
167	Ms. Anita Wisch	Valencia, CA 91355
168	Mrs. Sylwia Zielinska	Zambrow, ot 18-300
169	Ms. Gudrun Dennis	Gainesville, FL 32653
170	Mr. Alan Podber	Brattleboro, VT 05302
171	Ms. ISABEL CERVERA	FAITH, NC 28147
172	Mrs. Marianne Frusteri	Rocky River, OH 44116
173	Mrs. Silvia Bertano	Torino, ot 10129
174	Ms. Lauren Schiffman	El Cerrito, CA 94804
175	Mr. Peter Lee	San Francisco, CA 94118
176	Ms. roth woods	ann arbor, MI 48103
177	Mr. David Kagan	Jersey Shore, PA 17740
178	Dr. Quentin Fischer	Roanoke, VA 24018
179	Miss. toni siegrist	Boston, MA 02116
180	Miss. Marlen Hdz.	México City, ot 14438
181	Ms. Karen Neubauer	Huntsville, AL 35801
182	Mrs. Joan Squires	Oceanside, CA 92057
183	Ms. Laura Hanks	Portland, OR 97215
184	Mrs. Judy Rees	Glenalta, VT 05052

185	Ms. Nancy Hiestand	Davis, CA 95616
186	Mr. Tim howard	Arcata, CA 95521
187	Ms. Hilarie Ericson	Seattle, WA 98115
188	Ms. Maggie Shaffer	Arcata, CA 95521
189	Ms. Andrea Lewis	Hamilton, NJ 08690
190	Ms. Bonnie Dombrowski	Pasadena, CA 91115
191	Mr. Marc Kiefer	Walnut Creek, CA 94596
192	Mr. John Stewart	Redway, CA 95560
193	Ms. Jennifer Hayes	Modesto, CA 95350
194	Mr. Jon Anderholm	Cazadero, CA 95421
195	Ms. Tammy Weatherly	Cortland, OH 44410
196	Ms. Amy Harlib	New York, NY 10011
197	Mr. Mark M Giese	Racine, WI 53403
198	Mr. Paul Norup	Crescent City, CA 95531
199	Ms. Dawn Hendry	Littleton, CO 80127
200	Miss. Jewell Batway	Apache Junction, AZ 85120
201	Ms. Susannah Gelbart	Las Vegas, NV 89149
202	Ms. elizabeth darovic	Monterey, CA 93940
203	Ms. maureen roche	Petrolia, CA 95558
204	Ms. Tracy Cole	Glendale, AZ 85302
205	Mr. Brant Kotch	Houston, TX 77024
206	Ms. Lynn Shauinger	San Francisco, CA 94117
207	Mr. Pete DeLorenzo	Garfield, NJ 07026
208	Ms judith hazelton	bennington, VT 05201
209	Dr. Christine Stewart	Escondido, CA 92026
210	Ms. Jelica Roland	Buzet, ot 11111
211	Mr. Ryan Acebo	Oakland, CA 94602
212	Miss. Yvette St. Onge	Agoura Hills, CA 91301
213	Ms. Laurie Fraker	El Centro, CA 92243
214	Mr. John Kirchner	Fort Wayne, IN .46807
215	Mr. thomas moore	Houston, TX 77084
216	Ms. R Soxsmith	Canberra, ot 2600
217	Mr. Paul Kalka	Conshohocken, PA 19428
218	Mrs. Ruhee Baltz	London, ot 00000
219	Dr. Martha Herrero	Costa Mesa, CA 92627
220	Miss. Tanja Rieger	Neumünster, ot 24536
221	Ms. Linda Yonts	PETROLIA, CA 95558
222	Ms. Rita Carlson	Eureka, CA 95502
223	Ms. Linda Jones	CORNVILLE, AZ 86325
224	Mr. John Oda	San francisco, CA 94115
225	Mr. James Maurer	Milwaukee, WI 53208
226	Ms. Vicky Matsui	Seattle, WA 98122
227	Mr. Joseph Shulman	San Diego, CA 92115
228	Mr. Lorenz Steininger	stafford, VA 22554
229	Ms. Mary Eastman	Toledo, OR 97391
230	Mrs. Jody Gibson	Des Moines, IA 50315
231	Miss. CARLA DAVIS	CORTE MADERA, CA 94925

232	Ms. Lotte Larsson	Roskilde, ot 4000
233	Ms. Kathi Ridgway	Pickerington, OH 43147
234	Mr. richard kite	New York, NY 12345
235	Mr. Roger Schmidt	Madison, WI 53713
236	Ms. Lori Vaccaro	Bronx, NY 10465
237	Mr. Martin Marcus	San Diego, CA 92120
238	Mrs. Deborah Boomhower	Albany, NY 12205
239	Miss. Jillian Fiedor	Billings, MT 59101
240	Mrs. Carol Jurczewski	Riverside, IL 60546
241	Mrs. Toby Ann Reese	Valley City, OH 44280
242	Mrs. Mireille Urbain	Marseille, ot 13000
243	Ms. Patricia Lotus	Eureka, CA 95501
244	Mrs. Denise Kastner	Lowell, IN 46356
245	Mr. john martinez	lomita, CA 90717
246	Mr. Robert Shearer	Mckinleyville, CA 95519
247	Ms. Betina Garsen	eureka, CA 95501
248	Mr. ilia wehman	ashqelon, ot 7849803
249	Mr. harry knapp	Riverside, CA 92507
250	Mr. Richard Stern	New York, NY 10023
251	Ms. Sally Madigan	Meadow Vista, CA 95722
252	Mr. Randy Harrison	Eugene, OR 97402
253	Mr. John Livingston	Redding, CA 96001
254	Dr. Elisabeth Bechmann	St. Pölten, ot 00000
255	Mrs. Julie Wreford	Newport, ot NP19 7BN
256	Mr. Daniel Fernandes	Aveiro, ot 3800
257	Ms. Elmone Kissling	Eureka, CA 95503
258	Mrs. Candace Rocha	Los Angeles, CA 90031
259	Mr. Brian Florian	Beverly Hills, CA 90211
260	Ms. Rebecca Canright	Asbury, NJ 08802
261	Ms. Bronwen evans	VANCOUVER, WA 98101
262	Mr. Tom McBride	Sebastopol, CA 95472
263	Ms. Kristen Renton	Valencia, CA 91354
264	Miss. Camelia Mitu	Bucharest, ot 01234
265	Mr. Eliot Tigerlily	Garberville, CA 95542
266	Ms. Jo Harvey	Pacific, WA 98047
267	Mrs. Mary Shabbott	Punta Gorda, FL 33950
268	Mr. Brennan Lagasse	Tahoma, CA 96142
269	Mr. Abe Levy	BONITA SPRINGS, FL 34134
270	Mr. Sam King	McKinleyville, CA 95519
271	Ms. Twyla Meyer	Pomona, CA 91767
272	Mr. Dan and Paula Fogarty	Santa Rosa, CA 95409
273	Mrs. Carol Vallejo	Stockton, CA 95209
274	Mr. Rick Huyett	Los Gatos, CA 95033
275	Mrs. Vic Bostock	Altadena, CA 91001
276	Mrs. Joyce Overton	Rowlett, TX 75088
277	Dr. Cary Frazee	Eureka, CA 95503
278	Mrs. K R	SF, CA 94117

279	Mr. jesse williams	cincinnati, OH 45224
280	Mr. Pablo Bobe	CABA, ot 1013
281	Mrs. Antonella Nielsen	Copenhagen, ot 02400
282	Ms. Gloria Picchetti	Chicago, IL 60613
283	Ms. Louise Lieb	Sebastopol, CA 95472
284	Mr. Jörg Gaiser	Baiersbronn, ot 72270
285	Mr. chris ocean	berlin, CO 80001
286	Ms. Amber Coverdale Sumrall	Soquel, CA 95073
287	Mr. Samuel Durkin	Fairfield, CA 94534
288	Mr. Douglas Mccormick	Coto De Caza, CA 92679
289	Mrs. Charline Crump	Arcata, CA 95521
290	Ms. Sheila Desmond	Cameron Park, CA 95682
291	Mr. Martin Horwitz	San Francisco, CA 94122
292	Ms. Jill Davine	Culver City, CA 90232
293	Mr. Robert Davenport	Lakewood, CA 90712
294	Ms. Lisa Bettendorf	Redwood City, CA 94062
295	Mr. Robert McCombs	Arcata, CA 95518
296	Mr. George F. Klipfel II, CLS	Cathedral City, CA 92234
297	Mr. Glen Colwell	Windsor, CA 95492
298	Ms. Karynn Merkel	Eureka, CA 95503
299	Mrs. Astrid Keup	Allendorf, ot 35469
300	Ms. Barbara Goodell	Boonville, CA 95415
301	Mrs. Edeltraut Renk	Sacrofano, ot 00060
302	Miss. Claudia Correia	portimão, ot 8500 549
303	Ms. Karin Rachel Anderson	Hayfork, CA 96041
304	Miss. Cristina Tirelli	Reggio Emilia, ot 42123
305	Mr. Norman Dyche	Fortuna, CA 95540
306	Ms. CAROL COLLINS	DOVER, DE 19904
307	Mr. Joe R	denver, CO 80209
308	Mr. Mark Hollinrake	New York, NY 10026
309	Miss. Robyn Reichert	Lake Worth, FL 33467
310	Ms. Julie Smith	Los Osos, CA 93402
311	Mr. Nathan Vogel	San Francisco, CA 94131
312	Mr. Brian Wilson	Coral Gavles, FL 33134
313	Ms. Lynette Ridder	Concord, CA 94521
314	Mr. Ilya Turov	Moreno valley, CA 92555
315	Ms. Kelly Brannigan	Oceanside, CA 92056
316	Mr. Harry Blumenthal	Eureka, CA 95501
317	Ms. Lisa Daloia	Elkton, MD 21921
318	Ms. Molly Huddleston	Santa Rosa, CA 95402
319	Mr. Michael Sarabia	Stockton, CA 95207
320	Mrs. Dori Cole	Wheaton, IL 60189
321	Ms. shirley mills	sandwell, ot dy4 9au
322	Ms. Heather Cross	Brooklyn, NY 11222
323	Mrs. sandra albo	sesto san giovanni, ot 20099
324	Mrs. Eleanor Dowson	Mill Creek, WA 98012
325	Mr. Alan Gonzalez	Long Beach, CA 90815

326	Ms. Kris Diamond	Arcata, CA 95521
327	Ms. Sarah B Stewart	Watertown, MA 02472
328	Mr. Rosario Cosimo	Caserta, ot 81100
329	Dr. janet maker	los angeles, CA 90024
330	Ms. Ann Kuter	Warrington, PA 18976
331	Mrs. Angelina Coriandoli	Montreal, QC h8p3m3
332	Ms. Heidi Parvela	Helsinki, ot 00530
333	Mr. Carroll Arkema	Pompton Lakes, NJ 07442
334	Ms. Ann Rennacker	Fort Bragg, CA 95437
335	Ms. Irene Huskisson	Springdale, AR 72764
336	Mr. Bruce Donnell	Santa Fe, NM 87506
337	Mr. Thomas Windberg	Austin, TX 78745
338	Ms. Lorraine Lowry	Vacaville, CA 95688
339	Mrs. Deborah Spencer	Billerica, MA 01821
340	Ms. Kristen Lowry	Vacaville, CA 95688
341	Mrs. Nathalie QUESNEL	CALAIS, ot 62100
342	Mr. Lawrence Jimenez	Hollywood, CA 90068
343	Ms. Marcy Gordon	Brooklyn, NY 11233
344	Mr. Sam Waldman	Mendocino, CA 95460
345	Mr. Antonio García-Palao Redondo	Madrid, ot 28001
346	Ms. Pat Blackwell-Marchant	Castro Valley, CA 94552
347	Mr. dale riehart	san francisco, CA 94107
348	Mrs. Karen and Jeff Hay	Honolulu, HI 96825
349	Ms. Lacey Hicks	Fremont, CA 94536
350	Mr. Nat Chilas	Miranda, CA 95553
351	Mrs. antonia maestre	san juan, PR 00920
352	Mr. Chris Drumright	M<urfreesboro, TN 37130
353	Ms. Louise Wallace	22031, VA 22031
354	Mrs. Caroline Sévilla	Champs sur marne, NY 12345
355	Mrs. Beatriz Pallanes	Santa Ana, CA 92704
356	Dr. Bruce Hlodnicki	INDIANAPOLIS, IN 46226
357	Mr. David Wiley	Minneapolis, MN 55405
358	Miss. Lauri DesMarais	innsbrook, MO 63390
359	Mr. Dana Bleckinger	Yachats, OR 97498
360	Ms. Lynn Barton	Paradise, CA 95969
361	Dr. Nic Duon	santa ana, CA 92705
362	Miss. Jennifer Miller	Essex, MD 21221
363	Mr. James R Monroe	Concord, CA 94521
364	Ms. julie schampel	mckeesport, PA 15133
365	Mr. Scott Gibson	Saint Albans, WV 25177
366	Mr. Michael Guest	Redcrest, CA 95569
367	Ms. Oona Smith	Arcata, CA 95521

Additional emails received by Director Sheri Woo (continued from pg. 84 of the 2/28/19 agenda packet).

From: Sheri L Woo
To: Lori Taketa; Richard Engel
Subject: more
Date: Saturday, February 23, 2019 7:39:03 AM
Attachments: image.png

---

jon lo	Inbox	Support Clean, Renewable Energy in Humboldt County - Sheri W...	9:19 PM
Karen Ratzlaff	Inbox	Support Clean, Renewable Energy in Humboldt County - Sheri W...	8:01 PM
Jon Spitz	Inbox	Support Clean, Renewable Energy in Humboldt County - Sheri W...	Feb 22
Felicia Dale	Inbox	Support Clean, Renewable Energy in Humboldt County - Sheri Wo...	Feb 22
Philip Ratcliff	Inbox	Support Clean, Renewable Energy in Humboldt County - Sheri W...	Feb 22
Bonnie MacRaith	Inbox	Support Clean, Renewable Energy in Humboldt County - Sheri W...	Feb 22
Marsha Lowry	Inbox	Support Clean, Renewable Energy in Humboldt County - Sheri W...	Feb 22
Asano Fertig	Inbox	Support Clean, Renewable Energy in Humboldt County - Sheri W...	Feb 22
Juliet Pearson	Inbox	Support Clean, Renewable Energy in Humboldt County - Sheri W...	Feb 22
carrie west	Inbox	Support Clean, Renewable Energy in Humboldt County - Sheri W...	Feb 22

From: Sheri L Woo
To: Lori Taketa; Richard Engel
Subject: part 3
Date: Sunday, February 24, 2019 10:36:54 AM
Attachments: image.png

Joyce King	Inbox Support Clean, Renewable Energy in Humboldt County - Sheri Woo RCEA RE: Support Clean, Renewable Energy in Humboldt County null Dear R...	Feb 23
Jamie Green	Inbox Support Clean, Renewable Energy in Humboldt County - Sheri Woo RCEA RE: Support Clean, Renewable Energy in Humboldt County null Dear R...	Feb 23
Petra Bingham	Inbox Support Clean, Renewable Energy in Humboldt County - Sheri Woo RCEA RE: Support Clean, Renewable Energy in Humboldt County null Dear R...	Feb 23
Melissa Hastings	Inbox Support Clean, Renewable Energy in Humboldt County - Sheri Woo RCEA RE: Support Clean, Renewable Energy in Humboldt County null Dear R...	Feb 23
janet forman	Inbox Support Clean, Renewable Energy in Humboldt County - Sheri Woo RCEA RE: Support Clean, Renewable Energy in Humboldt County null Dear R...	Feb 23
Tineke Pedroni	Inbox Support Clean, Renewable Energy in Humboldt County - Sheri Woo RCEA RE: Support Clean, Renewable Energy in Humboldt County null Dear R...	Feb 23
Joanna Welch	Inbox Support Clean, Renewable Energy in Humboldt County - Sheri Woo RCEA RE: Support Clean, Renewable Energy in Humboldt County null Dear R...	Feb 23
carol lee	Inbox Support Clean, Renewable Energy in Humboldt County - Sheri Woo RCEA RE: Support Clean, Renewable Energy in Humboldt County null Dear R...	Feb 23
M. Scillappi	Inbox Support Clean, Renewable Energy in Humboldt County - Sheri Woo RCEA RE: Support Clean, Renewable Energy in Humboldt County null Dear R...	Feb 23
John Zuehlke	Inbox Support Clean, Renewable Energy in Humboldt County - Sheri Woo RCEA RE: Support Clean, Renewable Energy in Humboldt County null Dear R...	Feb 23
Donald Williams	Inbox **Support Clean, Renewable Energy in Humboldt County** - Sheri Woo RCEA RE: Support Clean, Renewable Energy in Humboldt County null Dear	**Feb 23**

From: Sheri L Woo
To: Lori Taketa; Richard Engel
Subject: this morning"s batch of emails
Date: Monday, February 25, 2019 8:35:53 AM
Attachments: image.png

Julia Schebach	Inbox	**Support Clean, Renewable Energy in Humboldt County** - Sheri Woo RCEA RE: Support...	12:28 AM
Wendy Ring	Inbox	**Support Clean, Renewable Energy in Humboldt County** - Sheri Woo RCEA R...	
Joyce Coe	Inbox	**Support Clean, Renewable Energy in Humboldt County** - Sheri Woo RCEA RE: Support...	Feb 24
Christine Hayes	Inbox	**Support Clean, Renewable Energy in Humboldt County** - Sheri Woo RCEA RE: Support...	Feb 24
Michele Villeneuve	Inbox	**Support Clean, Renewable Energy in Humboldt County** - Sheri Woo RCEA RE: Support...	Feb 24
Gail Coonen	Inbox	Support Clean, Renewable Energy in Humboldt County - Sheri Woo RCEA RE: Support ...	Feb 24
Tina Coiafranceschi	Inbox	Support Clean, Renewable Energy in Humboldt County - Sheri Woo RCEA RE: Support ...	Feb 24
Erin Rowe	Inbox	Support Clean, Renewable Energy in Humboldt County - Sheri Woo RCEA RE: Support ...	Feb 24
Wyman Whipple	Inbox	Support Clean, Renewable Energy in Humboldt County - Sheri Woo RCEA RE: Support ...	Feb 24

Materials Submitted

At Meeting

From: Fennell, Estelle
To: Lori Taketa
Subject: FW: Friends of the Eel River 100% supports RCEA"s transition to 100% clean energy
Date: Thursday, February 28, 2019 3:10:56 PM

Here is the only email I received.

Thanks,

Estelle

Estelle Fennell
2nd District Supervisor
County of Humboldt
(707) 476 2392
efennell@co.humboldt.ca.us

From: Stephanie Tidwell [redacted]
Sent: Thursday, February 21, 2019 1:20 PM
To: info@redwoodenergy.org
Cc: mwinkler@cityofarcata.org; sdaugherty@bluelake.ca.gov; aallison@ci.eureka.ca.gov; dglaser@ci.fortuna.ca.gov; wilsonf@cityofriodell.ca.gov; woo@hbmwd.com; mmarshall@redwoodenergy.org; Fennell, Estelle <EFennell@co.humboldt.ca.us>
Subject: Friends of the Eel River 100% supports RCEA's transition to 100% clean energy

Dear RCEA Board Members,

Friends of the Eel River supports the local transition to clean, sustainable, and renewable energy through the Community Choice Energy program administered by RCEA. I'm writing to urge you to take action at your February 28, 2019 meeting to adopt the official goal of providing 100% clean, renewable energy to Humboldt County by 2025.

We are pleased that RCEA is already successfully providing cleaner electricity to Humboldt County consumers at lower rates than PG&E. But the climate crisis demands that we take more ambitious action.

Your Community Advisory Committee is recommending that the Board adopt a goal of 100% clean, renewable electricity by 2025. This recommendation is both prudent and ambitious. With good planning and the right priorities, RCEA can achieve the community's goals for clean and renewable energy while still charging competitive rates to consumers.

To be clear, we do not support dams as a clean or sustainable energy source. Medium to large dams are increasingly understood to not only destroy fisheries but also as sources of climate change emissions (methane largely). While small scale hydro projects can provide some sustainable energy when properly designed, the vast majority of our nation's dams (and their reservoirs) should not be considered clean energy sources. We are unclear as to whether RCEA plans to count hydropower as a source of clean energy. If so, we urge you to reconsider.

We are facing a global climate crisis. In Humboldt, the effects of this crisis include potentially catastrophic sea level rise, and the likelihood of exacerbated weather extremes that bring increased wildfire, drought, and flood hazards. But we aren't just affected by climate change; we're also helping to cause it. And one of the biggest sources of greenhouse gas emissions is electricity generation. With renewable technology evolution now making clean energy generation cost-competitive with dirty energy before you even factor in the ecological costs, we no longer have any excuses for not taking urgent action to facilitate the transition.

We hope you will continue taking a lead on regional renewable energy development. Please adopt the CAC's recommendations and help move Humboldt County to a clean energy future.

Sincerely,

Stephanie Tidwell, Executive Director
Friends of the Eel River
P.O. Box 4945
Arcata, CA 95518
Office: (707) 798-6345
[redacted]

February 28, 2019

RCEA Board of Directors

Dear Directors:

As a Community Choice Energy customer, I urge the Board to adopt a goal of 100% clean energy by 2025 and create a plan to implement this goal.

I enthusiastically support rapid development of offshore wind and solar micro-grids, rapid development of a variety of energy storage processes and facilities, and collaboration with city and Humboldt County planning departments to maximize energy conservation above and beyond State of California requirements. I support the Board requiring community benefit agreements for all energy infrastructure contracts.

Wind and solar are the most reliable sources of clean energy over time. With climate disruption, hydro may be unreliable in the near future. Combustion energy sources, like biomass, are not clean; carbon dioxide is the combustion product 24/7. The latest climate studies show we have about 12 years to significantly reduce atmospheric carbon dioxide. In Humboldt County, the simplest most cost effective way to reduce atmospheric carbon dioxide is to keep out biggest, oldest redwood trees standing and photosynthesizing and manage both redwood and mixed evergreen forests to foster old growth characteristics.

As a CCE customer, I want my bill payments to go toward wind, solar and energy storage instead of subsidizing the timber industry by paying them to burn their waste.

Thank you for giving serious consideration to my input.

Sincerely,

Diane Ryerson

Diane Ryerson
[redacted]
Arcata, CA 95521

February 28 2019

To: RCEA Board

Thank you for the opportunity to voice my support of clean renewable energy.

I recognize that RCEA is required to use biomass as a result of recent State laws; however, since biomass is the most expensive energy source that we rate payers must pay for, I urge RCEA to replace biomass with solar and wind energy and energy storage as soon as possible.

The vast majority of climate scientists support the evidence that global warming is at or near the tipping point at which abrupt climate change will ensue. We do not have the time available for biomass as a source of energy to be effectively carbon neutral.

Pollution from 24/7 biomass burning for energy is detrimental to human health. Dr. Ring in October 2016 stated the health concerns of the medical community. In the consent decree for the Blue Lake Power plant VS the US DOJ and EPA, the court states (top of page 25) ..."the reductions of CO and NOX will provide pollution reduction benefits to the surrounding community." Cleaner is not clean. The Scotia power plant is 873 ft from a grades K-8 school play ground.

The cost of biomass appears to be mandated by state law under the accounting concept called cost plus. My experience in other fields showed that cost plus rewards inefficiency. Additionally, all renewables have received indirect subsidies in terms of Productions Tax Credits.(See IRS 8835) There is even a way to sell excess credits.

Can staff assure the public that we are made aware of any Tax Credit Monetization that occurred in the past and may still be available for all renewable contracts?

In my opinion, biomass provides private profit over public good at a time when business as usual will be catastrophic.

Paying a premium for a consumable polluting fuel does not appear to be a prudent use rate payer fees. Energy cost savings should be used to acquire and/or invest in assets that will have a long useful life.

Thank you.

Walt Paniak

Walt Paniak
Arcata, CA 95521

My long-term personal goals for RCEA and Humboldt County – Michael Winkler

1. On an annual basis, make Humboldt County a net energy producer based on local renewable energy sources (primarily wind, secondarily biomass, solar PV, small-scale hydro, biogas)
2. On an annual basis, make Humboldt County a zero-net greenhouse gas producer (greenhouse gas emissions (CO2, methane, black carbon) totally offset annually by absorption by local forest growth)
3. Minimize exposure of local population to non-CO2 air emissions (particulates, CO, NOx) from biomass combustion (biomass power plants, wood stoves, wood fireplaces, controlled and uncontrolled burns) with special emphasis on vulnerable populations (children, elderly, persons with compromised respiratory function or other health problems). Pursue long-term replacement of existing biomass power plants with advanced, low-emission biomass gasification power plants. Phase out existing use of wood stoves and fireplaces and replacement with electric heat pumps.
4. Cost-effectively maximize energy efficiency to minimize total energy consumption
5. To the maximum extent feasible, convert existing fossil fuel uses (natural gas, gasoline, diesel fuel, jet fuel, propane) to electricity.

Achieve the above goals while keeping electricity prices less than PG&E.

I would estimate that electricity is no more than 25% of total energy use in Humboldt County so I want to increase RCEA's emphasis on these other energy uses and especially on shifting existing natural gas use to renewable electricity.

I also think that people tend to confuse 100% renewable electricity and 100% renewable energy so I want to make this distinction clearer to people.

As I mentioned previously, I am less interested in the electricity that RCEA purchases coming 100% from renewable energy sources, especially if the electricity comes from outside Humboldt County, than I am in pursuing the five goals that I list above.

Michael Winkler

2/28/2019

The above represent my personal goals and do not necessarily reflect the position of RCEA or the RCEA Board of Directors

REDWOOD COAST EnergyAuthority

STAFF REPORT

Agenda Item # 11.2

AGENDA DATE:	February 28, 2019
TO:	Board of Directors
PREPARED BY:	Dana Boudreau, Acting Executive Director, for Matthew Marshall
SUBJECT:	PG&E Bankruptcy Update

SUMMARY

General Counsel Nancy Diamond will provide an update on PG&E's bankruptcy proceedings.

RECOMMENDED ACTION

None. Information only.

ATTACHMENTS

None.

REDWOOD COAST EnergyAuthority

STAFF REPORT

Agenda Item # 12.1

AGENDA DATE:	February 28, 2019
TO:	Board of Directors
PREPARED BY:	Lou Jacobson, Demand Side Management Director
SUBJECT:	RCEA Energy Efficiency Programs Update

SUMMARY

Demand Side Management Director Lou Jacobson will provide an update on RCEA's Energy Efficiency programs.

RECOMMENDED ACTION

None. Information only.

ATTACHMENTS

Director Jacobson will present a powerpoint report at Thursday's Board meeting.

REDWOOD COAST EnergyAuthority

Agenda Item #12.1 - Presentation

Demand Side Energy Programs Update

source	delivery	customer
RCEA	PG&E	YOU
buying and building electricity supply	delivering energy, maintaining lines, billing customers	benefitting from affordable rates, local control, cleaner energy

REDWOOD COAST EnergyAuthority

2018 Energy Watch Highlights

2018 Energy Watch Est. 1st Year Avoided Costs and Incentives Disbursed

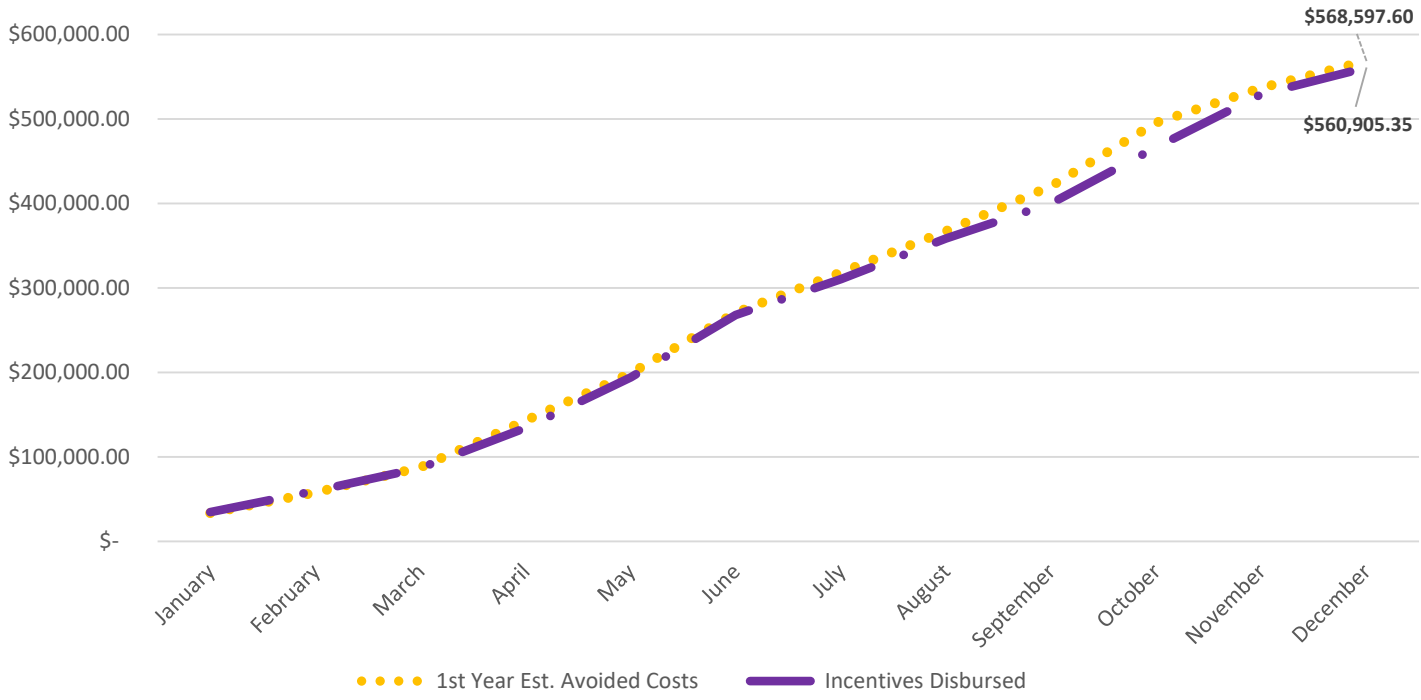

> 400 Projects	$560k Incentives Disbursed
Est. 1st Year Avoided Costs Exceeded $550k	Est. 1st kWh Savings Exceeding 2.4 million

REDWOOD COAST EnergyAuthority

2018 Public Agency Solar Program Highlights

Completed 26 Efficiency Projects	> $35k Incentives Disbursed
Est. 1st Year Avoided Costs > $39k	Est. 1st kWh Savings Exceeded 200,000
Completed 28 Solar Site Assessments	22 Feasible Solar PV Projects
1.5 MW DC PV Capacity	and an Est. > $400k in 1st year avoided costs

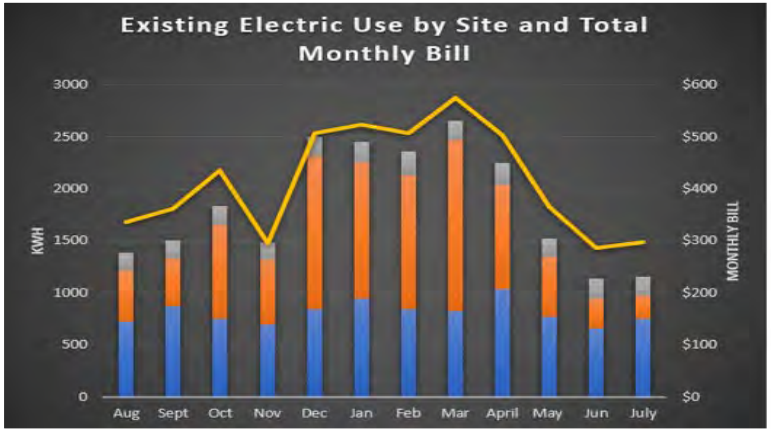

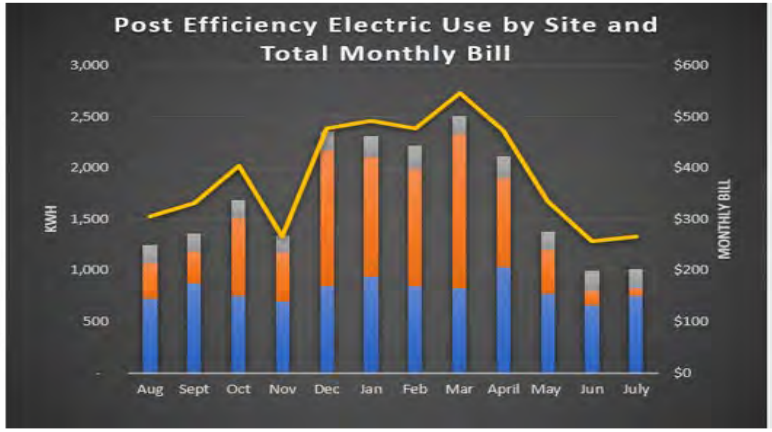

REDWOOD COAST EnergyAuthority

2018 CCE Residential Energy Service Highlights

- Transitioned from PG&E Funding to CCE Funding
- PG&E Foundation Supported the Transition
- CCE Residential Energy Services
  - 146 Services Completed
  - Completed 14 Home Performance Projects

REpower+ 100% renewable

REDWOOD COAST EnergyAuthority

Prop 39 Program Update

- Proposition 39

>$5 Million in Project Funding	Est. 1.75 Million kWh Offset	Est. 27,869 Therms Reduced
109 kW PV Installed	Est. $405k in 1st Year Avoided Costs	> 50 Projects Completed

- Projects Include:

Smart Thermostats	Lighting	Solar
Windows	Refrigeration	Heat Pumps

REDWOOD COAST EnergyAuthority

Prop 39 Program Cont.

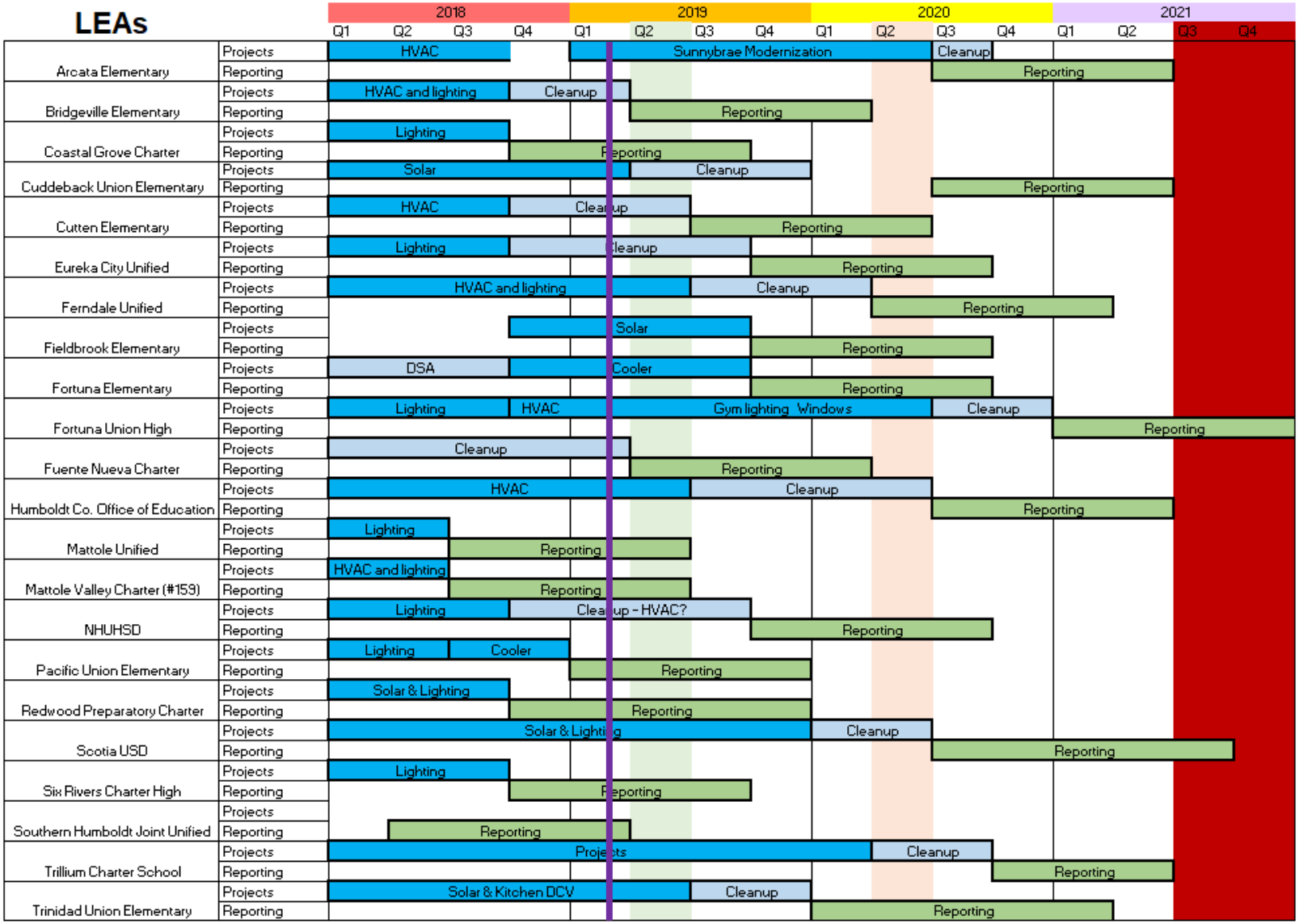

REDWOOD COAST EnergyAuthority

2019 Program Implementation

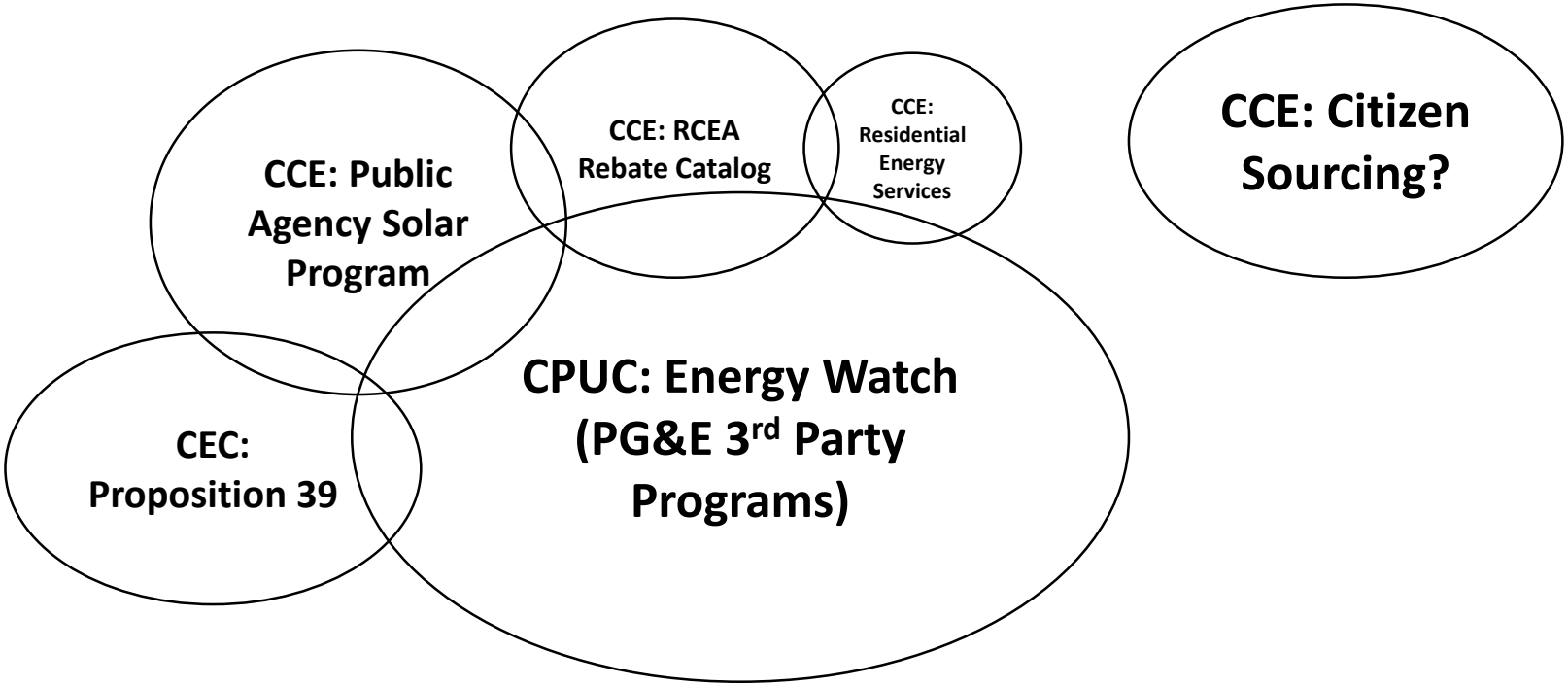

REDWOOD COAST EnergyAuthority

2020 and Beyond

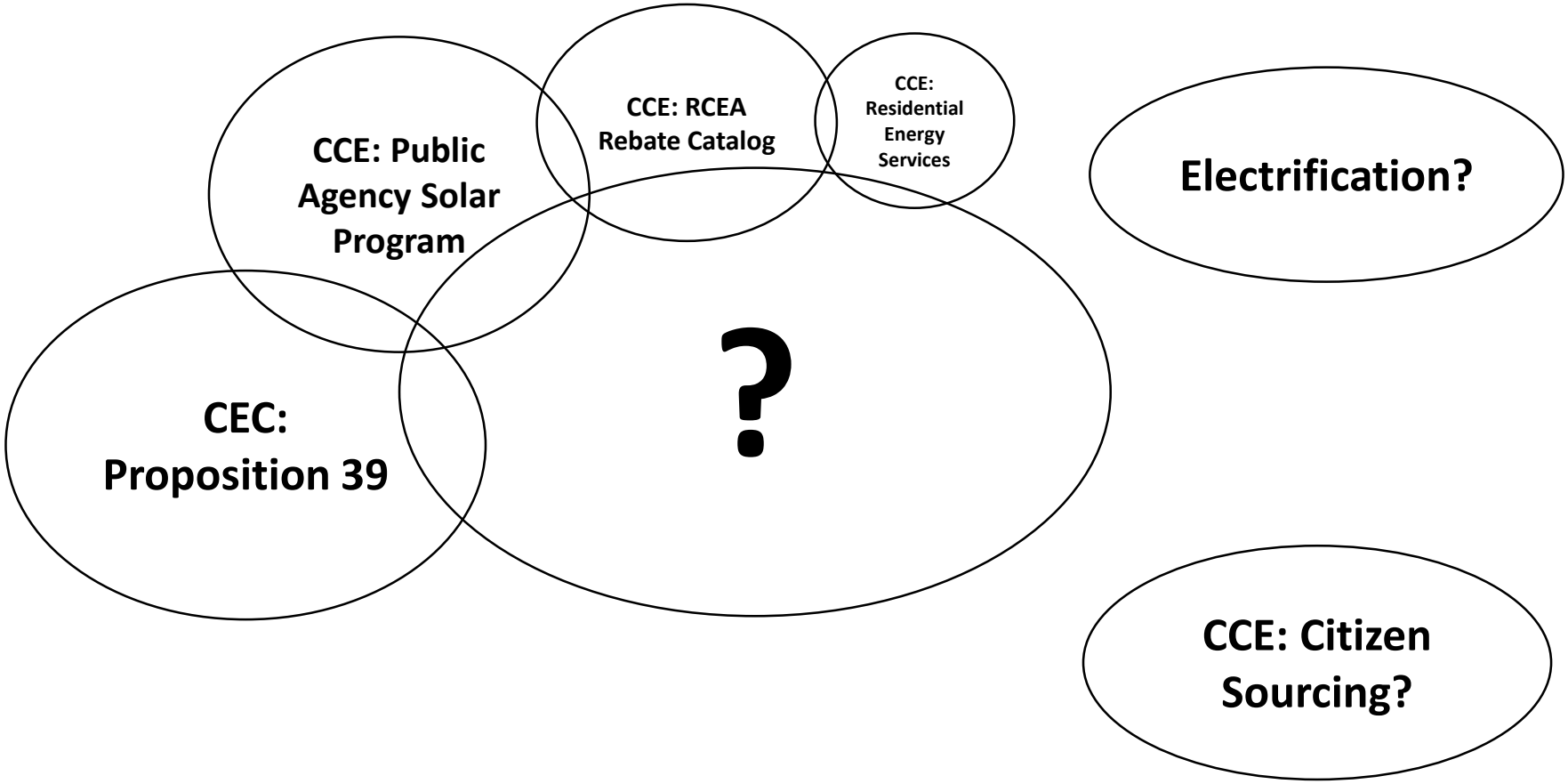

REDWOOD COAST EnergyAuthority

2020 Planning

- Energy Watch
  - Request for Abstract and Proposals
  - Local Government Partnership
- Rural Regional Energy Network
- The Election of Program Administrator Status
- Electrification

REDWOOD COAST EnergyAuthority

Questions?

Lou Jacobson
Director of Demand Side Management | Redwood Coast Energy Authority
(707) 269-1700 x 304 |www.redwoodenergy.org