Fieldbrook Elementary School District

REQUEST FOR QUALIFICATIONS
REQUEST FOR PROPOSALS

Proposition 39
Solar Photovoltaic System

Date Issued:
August 7, 2018

Fieldbrook Elementary School District Contact:

Justin Wallace, Superintendent
Fieldbrook Elementary School District
4070 Fieldbrook Rd, McKinleyville, CA 95519

Phone: 707-839-3201
Email: jwallace@nohum.k12.ca.us

Project Manager Contact:

Patricia Terry, Project Manager
Redwood Coast Energy Authority
633 3rd Street, Eureka, CA 95501

Phone: (707) 269-1700, x 315
Fax: (707) 269-1777
Email: pterry@redwoodenergy.org

Proposals Due on September 6, 2018 2:00 p.m. at
633 Third Street
Eureka, CA 95501
Fax or Email Proposals Will Not Be Accepted

TABLE OF CONTENTS

Request for Qualifications and Request for Proposals

Introduction and Overview 3
Statement of Work 3

APPENDICES

Appendix A: Proposed Project Schedule 6
Appendix B: Proposal Response Requirements 7
Appendix C: Energy Services Contract 12
Appendix D: Performance Bond 58
Appendix E: Payment Bond 60
Appendix F: Warranty Bond 62
Appendix G: Technical Facility Profile 64
Appendix 1: Construction Plans for Shed

REQUEST FOR QUALIFICATIONS/ REQUEST FOR PROPOSALS

Solar Photovoltaic System

Fieldbrook Elementary School District (District)

INTRODUCTION

The Fieldbrook Elementary School District (District) solicits proposals responsive to this Request for Qualifications/Request for Proposals from interested Energy Service Companies (ESCOs) to design, permit, install and commission a fully integrated and operational solar photovoltaic (PV) system. A proposed schedule indicating the timeline for this solicitation is identified in **Appendix A: Proposed Project Schedule**. A non-mandatory pre-proposal site visit and question forum will be held on **August 21, 2018 from 9:00 to 10:00 am** at 4070 Fieldbrook Rd, McKinleyville, CA. 95519. The site visit and forum are designed to increase the likelihood that respondents have the applicable and appropriate information necessary to deliver proposed solutions that meet the district's expressed needs.

OVERVIEW

This solicitation seeks proposals for a Photovoltaic (PV) system to be located on property owned by the District at 4070 Fieldbrook Rd, McKinleyville, CA. The expected work product will be to design and implement a photovoltaic solar system that has a first-year production value of no less than 20,000 kWh, that complies with Division of the State Architect (DSA) requirements and California Energy Commission (CEC) guidelines for use of Proposition 39 funding. Utility data can be provided by the Project Manager upon request. A new, solar-ready building will be constructed on site for the PV Array. The estimated size of the building will be 60 feet by 40 feet. The estimate south-facing roof area will be approximately 1200 square feet and is described in **Appendix G: Technical Facility Profile.** Total allocated Proposition 39 funding available to the District for this project, including permitting and design, is $65,250.00. The selected ESCO will work with the District to determine the best installation option(s), taking into account initial installation costs, long-term maintenance and operational costs, technical feasibility, permitting restrictions, aesthetics, customer preferences and future facility upgrades.

This procurement for design build services is authorized as an energy service contract pursuant to Government Code section 4217.12. Prior to the potential award of a contract to the selected ESCO, District Board of Directors will adopt a resolution as required by Government Code section 4217.12, finding that the anticipated cost to the District for electrical power generation to be provided by the proposed solar power project will be less than the anticipated marginal cost to the District of electrical energy that would have been consumed by the District in the absence of this project. The contract with the selected ESCO will be the sole contract the District will hold for the completion of this project.

STATEMENT OF WORK

The scope of services provided by the selected ESCO shall include all tasks required to design, fabricate, store, deliver, install and commission a fully operational PV system for the District. Any required ancillary equipment, such as security fencing for a ground-mounted installation, or access ladders for roof-mounted panels, are included in the scope of work. The scope shall also include, but not be limited to, securing all permits and approvals from governing agencies (including DSA and the Count of Humboldt) all labor, taxes, services, permit fees, training and equipment necessary to produce a fully operational solar PV system.

The selected ESCO will be expected to work with the District to design/engineer the solar PV system to meet the District's specific design and funding criteria, and to maximize the solar energy resources, taking into consideration the District's electrical demand and load patterns, proposed installation site, available solar resources, existing site conditions, proposed future site improvements, and other relevant factors. In addition, the selected ESCO will be expected to complete installation and integration of the system based on a schedule as dictated by the District's funding sources for this project.

The proposal shall contain a detailed explanation of the complete project and delineation of all work tasks to be performed by the awarded ESCO. The proposer must have the technical capability and demonstrated experience to complete the project as set out in this RFP.

The selected ESCO will be expected to furnish any and all electrical, structural and mechanical designs and specifications that are requested and/or required by DSA, or any other regulatory bodies with jurisdiction over the project.

Installation of the system is subject to California prevailing wage requirements, and the selected ESCO and its subcontractors are required to pay all workers employed for the performance of this contract no less than the applicable prevailing wage rate for each such worker. This project is subject to compliance monitoring and enforcement by the California Department of Industrial Relations pursuant to Labor Code sections 1725.5 and 1770 *et seq*. In accordance with Labor Code sections 1725.5 and 1770 *et seq*., all contractors and subcontractors working at the site shall be duly registered with the Department of Industrial Relations at time of bid opening and at all relevant times. Proof of registration shall be provided as to all such contractors prior to the commencement of any work.

The selected ESCO will work with the District and its representatives to determine the best approach for design. Final scope approval will be given prior to installation.

After approval of a final design by the District and the Project Manager, and after receiving any necessary regulatory approvals, the ESCO shall provide all necessary materials, equipment, and labor to construct and successfully commission the photovoltaic system installation and interconnection with the electrical grid.

The ESCO shall provide approved training for designated District personnel in the operation of the entire photovoltaic system, including the operation and maintenance of inverters, transfer switches, panel board, disconnects, and other features as requested by the school. The ESCO shall provide the school with written instructions and procedures, including any training and monitoring information, for shut-down and start-up activities for all components of the system.

All project services will comply with Proposition 39 Guidelines.

The ESCO will provide any necessary data and coordinate the project with all Prop 39 submission and reporting requirements. DSA's Interpretation of Regulations (IR) for solar PV installations may be found at the following link: https://www.documents.dgs.ca.gov/dsa/pubs/ir_16-8_rev10-16-12.pdf

All equipment provided by the ESCO for this Project shall have a history of successful operating experience in similar installations and shall be in new, unused condition. This equipment shall be

current technology with readily available non-proprietary replacement parts. All equipment used for this Project shall be approved by the District prior to installation.

Contractor's duties shall include but may not be limited to the following:

- Prepare construction documents where necessary.
- If necessary, hire design professionals to create plans and specifications for DSA approval.
- Ensure compliance with governing codes and standards including, but not limited, to Title 24 Standards and the California Building Code.
- Ensure compliance with all requirements for photovoltaic installations contained in the National Electric Code (NEC) and the California Electric Code (CEC), including, but not limited to, Articles 250, 310 and 690.
- Ensure compliance with CEC Loan Agreement, if any, for all relevant installations.
- Ensure the District participation and feedback in scoping process.
- Provide a schedule for completion of Project.
- Prepare a plan for ongoing equipment maintenance and system upgrade, if requested as an alternate.
- Assist the District in securing all relevant rebates including rebates from programs such as the Proposition 39 program.
- Ensure delivery of all materials and equipment to Site(s).
- Construct/Install Project.
- Manage all Subcontractors.
- Meet regularly to update the District representatives as to Project progress.
- Obtain and maintain all licenses, permits, and authorizations as needed for the Project.
- Commission Project; provide training on equipment/systems if requested.
- Provide project closeout, which may include electronic versions of As-Builts, operations and maintenance information with a training and monitoring session, permits, warranties and completion documentation.
- Provide assistance with DSA close-out, if required.
- Post installation audit and energy savings tracking pursuant to Proposition 39 guidelines.

APPENDIX A: PROPOSED PROJECT SCHEDULE

The following schedule is the proposed schedule, and may change during the project.

ACTIVITY	DATE
Issue RFQ/RFP	**August 7, 2018**
Pre-Proposal Site Visit	**August 21, 2018**
Responses Due	**Thursday, September 6, 2018**
Review and Selection of Finalist(s)	**September 18, 2018**
Interviews Scheduled and Conducted	**September 10-18, 2018**
ESCO Selected/Notice of Award issued	**September 18, 2018**
Contract Finalized/Notice to Proceed issued	**By October 12, 2018**
Conduct Design and Coordinate with Shed Constriction	**October – November 2018**
Anticipated Completion of Maintenance Shed	**November 2018**
Finalize Design	**November 2018**
Build Project	**November - August 2019**
Construction Complete	**By August 16, 2019**
Project Close-out and System Commissioning	**After Completion**

APPENDIX B: PROPOSAL RESPONSE REQUIREMENTS

For further information, please contact:

Patricia Terry, Project Manager
Redwood Coast Energy Authority
633 3rd Street, Eureka, CA 95501

Phone: (707) 269-1700, x317
Fax: (707) 269-1777
Email: pterry@redwoodenergy.org

PROPOSAL REQUIREMENTS:
Provide one (1) unstapled original, three (3) copies and one (1) electronic copy on a USB key at the time and place indicated in the cover letter to this RFQ/RFP. Fax or email proposals will not be accepted. **Late responses will not be accepted.**

Each proposal shall be submitted in writing and must include the following information:

ESCO PROFILE & QUALIFICATIONS:
The District may award the contract to the firm that, in its sole opinion, is the most capable of providing the range of services described in this RFP. To be considered for this Project, a proposer must, at a minimum, have demonstrated knowledge and experience in design, engineering and construction capabilities relevant to the scope of this RFP. The proposal must contain a response to each of the following:

- ***Answer all questions or state "N/A" if not applicable.***
- ***Please number and re-state each subheading or question, followed by your response. This improves clarity and makes it much easier to evaluate your response.***
- ***Number all pages.***

1. Name, address, contact numbers, email, website, and summary of the responding ESCO's experience with public school projects and energy upgrades.

2. If the responding ESCO is a business entity, provide information on the type of entity, its ownership, size, and location of its principal office.

3. All applicable licenses including license numbers and expiration dates.

4. Detailed resume(s) of personnel to be assigned to the Project.

    a. Identify proposed sub-ESCO(s) by name, address, and work to be performed.
    b. Summarize the scope of services (design, construction, training, etc.) directly offered by ESCO.
    c. Describe your qualifications and ability to design and install solar PV arrays.

5. List at least three (3) applicable design and/or construction projects completed by the ESCO and proposed Subcontractors within the past five (5) years that are similar in size and scope. Identify similar projects by name, location, owner, size, and date constructed.

    a. Include a list of references including contact names and telephone numbers for the representative projects.
    b. Source of funds used for the project (if known).

6. Describe your general approach to designing and constructing building systems and how the District will be involved in the process?

7. Provide a preliminary implementation plan that includes but is not limited to:
    a. Recommended location and required ancillary activities necessary to successfully install and grid-tie the proposed system.
    b. Steps to ensure all applicable building codes and/or state requirements are met
    c. Steps to ensure all applicable labor compliance requirements are met
    d. Number of trainees and or apprentices to be used
    e. Proposed Installed kW
    f. Proposed First year kWh production values that meet or exceeds funding requirements. See Statement of Work.
    g. Total Installed costs that are equal to or less than the not-to-exceed amount.
    h. Estimated first year energy cost savings
    i. Include a system monitoring service that can be used to retrieve such data for educational purposes.
    j. Include future expansion for energy storage capability.

The respondent may choose to use the following format to present project metrics.

Size (kW DC)	***Demand Savings (kW)***	***Year 1 Production (kWh)***	***Effective Useful Life***	***Year 1 Energy Cost Savings ($)***	***Inverter Size (kW)***	***Measure Cost ($)***

8. Confirm and briefly discuss labor, panel and inverter warranties.

9. Discuss your involvement with operations and maintenance within the warranty period.

10. Proposed Price
    a. The proposed price shall include all project costs (including design fees, DSA fees, permits, materials, labor, testing, commissioning, inspection, etc.).

PROPOSITION 39 REQUIREMENTS:
ESCOs will be required to comply with the Proposition 39 Program requirements.

Compensation will have a not-to-exceed cap based on the estimated funding allocation for the approved project, and an agreement to modify (increase or decrease) the cap if Proposition 39 funds change.

The payment schedule will be consistent with the funding allocation schedule. The ESCO will agree to maintain and make available records for inspection by the District and other agencies, and will provide or assist the District in providing required annual and final reports for the project, including data for reports to the Proposition 39 Citizens Oversight Board.

The ESCO will comply with and give notices required by laws, ordinances, rules, regulations, and lawful orders of public authorities bearing on performance of the Work, including but not limited to data and reports to the California Energy Commission required under Proposition 39.

ESCO acknowledges that all work must qualify as an eligible project under Proposition 39; and that the Statement of Work may be amended to reflect changes in funding allocation and District's Energy Expenditure Plan, upon mutual agreement of the Parties and a written amendment to this Contract related to any changes in scope, payment, and duration. Prior to commencement of any Work, District shall review and approve the Project.

The ESCOs are encouraged to maximize production and system size while saying below the project not-to-exceed value.

Public works ESCOs and Subcontractors must be registered with DIR, as specified in Labor Code section 1771.1(a). Project is subject to compliance monitoring and enforcement by DIR.

AGREEMENT:
The selected ESCO must enter into a written agreement for services using the District's form agreement for Energy Services (the "Contract"), a copy of which is included as **Appendix C**. The Contract includes the following indemnity requirement:

> "ESCO shall indemnify, defend with counsel acceptable to Fieldbrook Elementary School District, and hold harmless to the full extent permitted by law, Fieldbrook Elementary School District, its governing board, officers, agents, employees, and volunteers from and against any and all liability, demands, loss, damage, claims, settlements, expenses, and costs (including, without limitation, attorney fees, expert witness fees, and costs and fees of litigation) (collectively, "Liability") of every nature arising out of or in connection with Consultant's acts or omissions with respect to this Agreement, except such Liability caused by the active negligence, sole negligence, or willful misconduct of the Fieldbrook Elementary School District. This indemnification obligation is not limited by any limitation on the amount or type of damages or compensation payable under Workers' Compensation or other employee benefit acts, or by insurance coverage limits, and shall survive the expiration or early termination of this Agreement."

SELECTION PROCESS:
A selection committee will review the proposals and may select a short list of finalists for oral interviews.

REFERENCE CHECK:
The District will conduct a background/reference check of the responding firms. Proposed ESCOs that appear to have the necessary qualifications and who are acknowledged as competent to provide the services requested may be placed on the short list of finalists and interviewed.

INTERVIEW: The District may interview selected respondents.

FINAL SELECTION:
Predicated upon thorough review of proposals submitted and upon interviews with selected firms, the District will make a final selection and notify all finalists in writing.

The District will negotiate the final terms for services with the firm approved by the District Board. If it is not possible to reach mutual agreement with the designated firm, the District reserves the right to enter into negotiations with another firm.

The final selection will be made on the basis of best value, which includes, but is not be limited to the following criteria:

- Completeness and adherence to the requirements of this RFP.
- Qualifications and past similar experience.
- References.
- Fee and rates and base price proposal.

The District reserves the right to postpone selection for its own convenience, to withdraw this Request for Proposal at any time, and to reject any and all submittals without indicating any reason for such rejection. Submitted proposals become the property of the District.

As part of the negotiation process, the District reserves the right to require correction of technical errors in the proposal and to modify the published Statement of Work and to approve or disapprove the list of sub-consultants. Should the District determine that specific expertise is lacking in the project team, the District will reserve the right to request specific consultants with specific expertise to be added to the team. Any interpretation of, or change in, this Request for Proposal will be made by addendum, and shall become part of the Request for Proposal and any contract awarded.

Note: Pursuant to Government Code section 4529.12, District employees are prohibited from participating in the selection process when they have a financial or business relationship with any private entity seeking to enter into a contract with the District, and the District requires compliance with all laws regarding political contributions, conflicts of interest or unlawful activities.

The District reserves the right to contract with any entity responding to this Request for Proposals. The District makes no representation that participation in the Request for Proposal process will lead to an award of contract or any consideration whatsoever. The District shall in no event be responsible for

the cost of preparing any proposal in response to this Request for Proposals. The selection of ESCO(s) to participate in the Request for Proposal process if at all is at the sole discretion of the District.

From the period beginning on the date of the issuance of this Request for Proposals, and ending on the date of the award of the contract, no person, or entity submitting in response to this Request for Proposals, nor any officer, employee, representative, agent, or consultant representing such a person or entity shall contact any person within the District to engage in discussion of the process of selection or award process except for the District designee for questions listed in this Request for Proposals.

APPENDIX C: ENERGY SERVICES CONTRACT

CONTRACT

This Energy Services Contract ("Contract") is made by and between the Fieldbrook Elementary School District ("District"), and _____ ("ESCO").

District and ESCO hereby agree as follows:

RECITALS

WHEREAS, Government Code sections 4217.10, *et seq*., authorize the District, as a public agency, to enter into an energy services agreement wherein the ESCO provides conservation services to the District from an energy conservation facility on terms that its governing body determines are in the best interest of the District;

WHEREAS, pursuant to Government Code section 4217.11(d), "conservation services" include electrical, thermal, or other energy savings resulting from conservation measures, which shall be treated as a supply of such energy;

WHEREAS, through this Contract, the District intends to contract for the engineering, system design, fabrication and installation of photovoltaic solar systems that will result in energy savings to the District and which shall be a supply of energy to the District (the "Project") at the following site: Fieldbrook Elementary School located at 4070 Fieldbrook Road in McKinleyville, CA. (the "Project Sites" or "Sites", and each individually a "Site"), consistent with the terms of Government Code section 4217.10, *et seq*.;

WHEREAS, the District's Governing Board, after holding a hearing at a regularly scheduled public hearing and after having provided two weeks advanced notice of such hearing, made all findings required by Government Code section 4217.12 for the District to enter into this Contract;

WHEREAS, the ESCO shall engineer, design, and construct the Project pursuant to this Contract, including but not limited to certain General Terms and Conditions and other Contract Documents (as that term is defined in the General Conditions), which Contract Documents are incorporated into the Agreement by this reference;

NOW, THEREFORE, in consideration of the covenants hereinafter contained in this Contract, the District and ESCO agree as follows:

1. Description of Work

The ESCO will provide the design, construction, commissioning and installation of a Proposition 39 funded project at Fieldbrook Elementary School. The ESCO agrees to furnish all labor, materials, equipment, plant, tools, supervision, appurtenances, and services, including

transportation and utilities, required to perform and satisfactorily complete all work required for the Project. The ESCO agrees to furnish any and all electrical and mechanical designs and specifications including but not limited to performance specifications, panel layout and mounting diagrams, electrical drawings and calculations, mechanical drawings and calculations complete with stamp and signature of a licensed California Engineer.

It shall be the responsibility of the ESCO to obtain DSA approval of the Project plans. No work shall commence at any site prior to DSA approval of the Project plans.

2. Contract Documents

The Contract Documents consist of the Complete Proposal Documents, as submitted by ESCO, including applicable drawings and calculations, the Contract, any Amendment thereto, Schematic Drawings and Specifications, Supplementary General Conditions, if any, General Conditions, Detailed Project Schedule, Proposal Requirements, Request for Proposals, Disabled Veteran Business Enterprises Requirements (if applicable), Labor Compliance Program (if applicable), all addenda, required bond(s) and insurance certificates, completed Project Questionnaire, ESCO Prequalification , all of which are incorporated herein by this reference. All Contract Documents are intended to coordinate so that any work called for in one document and not mentioned in another document is to be executed as if mentioned in all documents.

3. Proposals & Compensation

As full compensation for ESCO's complete and satisfactory performance of the work and activities described in the Contract Documents, District agrees to pay ESCO, and ESCO agrees to accept the sum of _____ ($_____), which shall be paid to the ESCO according to the Contract Documents.

4. Prevailing Wages

This Project is subject to prevailing wage requirements, and ESCO and its Subcontractors are required to pay all workers employed for the performance of this contract no less than the applicable prevailing wage rate for each such worker.

5. Time for Completion

The starting date of the Contract shall be the day listed by the District in the Notice to Proceed and the ESCO shall fully complete all the work as detailed in accordance with Appendix A of the RFP: Proposed Project Schedule. Time is of the essence in the performance of this Contract.

6. Liquidated Damages

Liquidated damages for ESCO's failure to complete the Contract within the time fixed for completion inclusive of milestone dates are established in the amount of $200 per day per each Milestone until that Milestone is completed.

IN WITNESS WHEREOF, the parties agree to the terms of this Contract on the day and year written below.

_____	_____
District Authorized Signature	ESCO
Resolution No. _____	_____
	ESCO License No and Expiration Date
_____	By: _____
Date	Individual Signature
	_____
	Title
	_____
	Date
	For: _____
	Corporation or Partnership
	If Corporation, Seal Below.

For use by NCSIG Members:

Certificates of Insurance and Bonds Approved

By: _____
Director, JPA Services

Date: _____

General Conditions to Design-Build Contract for: Proposition 39 Solar Photovoltaic System Fieldbrook Elementary School District

GENERAL CONDITIONS TABLE OF CONTENTS

1.	**DEFINITIONS**	18
2.	**PROJECT MANAGER**	19
3.	**CONTRACT DOCUMENTS**	20
4.	**INTENT OF DRAWINGS AND SPECIFICATIONS**	21
5.	**TRADE DIVISIONS**	21
6.	**MASTER MANDATORY PROVISIONS**	22
7.	**ESCO**	22
8.	**RESPONSIBILITY OF ESCO**	23
9.	**SUBCONTRACTORS**	23
10.	**PERFORMANCE AND PAYMENT BONDS**	24
11.	**INSURANCE**	24
12.	**CODES AND REGULATIONS**	27
13.	**PERMITS AND TAXES**	28
14.	**PATENTS AND ROYALTIES**	28
15.	**SAFETY AND FIRE PREVENTION**	28
16.	**HAZARDOUS MATERIALS**	29
17.	**TEMPORARY FACILITIES**	30
18.	**SIGNS**	30
19.	**TIME**	30
20.	**PRE CONSTRUCTION & CONSTRUCTION SCHEDULE**	31
21.	**DELAYS AND TIME EXTENSIONS**	31

22. LIQUIDATED DAMAGES 32

23. DISTRICT'S RIGHT TO STOP WORK; TERMINATION OR SUSPENSION OF THE CONTRACT 33

24. ASSIGNMENT OF CONTRACT 34

25. COORDINATION WITH OTHER CONTRACTS 34

26. SUBMITTALS: SHOP DRAWINGS, CUTS AND SAMPLES 35

27. PAYMENTS 35

28. MODIFICATIONS OF CONTRACT 37

29. INDEMNITY 39

30. WARRANTY OF TITLE 40

31. USE OF COMPLETED PARTS OF THE WORK BEFORE ACCEPTANCE 40

32. GUARANTEE & WARRANTY 40

33. PROTECTION OF WORK AND PROPERTY 41

34. USE OF ROADWAYS AND WALKWAYS 41

35. MATERIALS 41

36. SUBSTITUTIONS 42

37. TESTING 43

38. INSPECTION 43

39. CLEANUP 44

40. CONSRUCTION WASTE MANAGEMENT 44

41. INSTRUCTIONS AND MANUALS 47

42. AS-BUILT DRAWINGS 47

43. SUBSTITUTION OF SECURITIES 47

44. NO DISCRIMINATION 48

45. LABOR STANDARDS 48

46. GENERAL RATE OF PER DIEM WAGES 49

47. RECORD KEEPING 49

48. PROJECT COMPLETION 50

49. TRENCHING OR OTHER EXCAVATIONS 51

50. RESOLUTION OF CONSTRUCTION CLAIMS 52

51. DISABLED VETERANS PARTICIPATION GOALS (APPLIES TO K-12 DISTRICTS ONLY.) 54

52. RETENTION OF DVBE RECORDS (APPLIES TO K-12 DISTRICTS ONLY.) 54

53. FINGERPRINTING (APPLIES TO K-12 DISTRICTS ONLY.) 54

55. DRUG-FREE WORKPLACE CERTIFICATION 55

56. PROVISIONS REQUIRED BY LAW DEEMED INSERTED 56

57. GENERAL PROVISIONS 56

APPENDIX D: PERFORMANCE BOND 58

APPENDIX E: PAYMENT BOND 60

APPENDIX F: WARRANTY BOND 62

APPENDIX G: TECHNICAL FACILITY PROFILE 64

1. DEFINITIONS

Addendum: A written change or revision to the Contract Documents issued to the prospective proposers prior to the time of receiving proposals.

Alternate: The sum to be added to or deducted from the base proposal if the change in scope of work as described in Alternates is accepted by the District.

Approved: Approved by the District or the District's authorized representative unless otherwise indicated in the Contract Documents.

Architect: The person or firm holding a valid license to practice architecture or engineering which has been designated (if any designated) to provide architectural or engineering design services on this Project. When Architect is referred to within the Contract Documents and no architect or engineer has in fact been designated, then the matter shall be referred to the District Superintendent or its designer.

As Directed: As directed by the District or its Project Manager, unless otherwise indicated in the Contract Documents.

As Selected: As selected by the District or its Project Manager, unless otherwise indicated in the Contract Documents.

Construction Manager: The individual or entity named as such by the District. If no Construction Manager is designated for the project, all references to the Construction Manager in these Contract Documents shall mean the District and/or its designee.

Contract: The legally binding agreement between the District and the ESCO wherein the ESCO agrees to furnish the labor, materials, equipment, and appurtenances required to perform the work described in the Contract Documents and the District agrees to pay the ESCO for such work.

Contract Documents: The Contract Documents are described in the Contract for this Project.

District and/or Owner: The District, its governing board, authorized officers and employees, and authorized representatives.

DSA: The State of California Division of the State Architect which has the authority to review, approve and inspect the safety of design, alteration and construction of school buildings.

DSA Pre-Check (PC) Approved: An "over-the-counter" design of a structure that is pre-approved by the DSA.

ESCO: The person or entity holding a valid license in the State of California required for performing this Project and who has contracted with the District to perform the construction work described in the Contract Documents. The term ESCO shall be construed to mean all of the officers, employees, Subcontractors, suppliers, or other persons engaged by the ESCO for the work of this Project.

Final Completion: Final Completion is achieved when the ESCO has fully completed all Contract Document requirements, including, but not limited to, all final punch list items and project closeout, to the District's satisfaction.

Furnish: Purchase and deliver to site of installation.

Governing Board: The Governing Board of the Fieldbrook Elementary School District.

Inspector: The person engaged by the District, pursuant to Section 17311 of the Education Code, to inspect the workmanship, materials, and manner of construction of buildings or portions of buildings to determine if such construction complies with the Contract Documents and applicable codes and regulations.

Indicated (or) As Shown: Shown on drawings and/or as specified.

Install: Fix in place, for materials; and fix in place and connect, for equipment.

Modification: An authorized change to the Contract Documents which may or may not include a change in contract price and/or time.

Project: The total construction work and activities described in these Contract Documents.

Project Manager: Redwood Coast Energy Authority (RCEA) serves as the Proposition 39 Project Manager for this Project.

Proposal: The properly completed and signed proposal to perform the construction work for the Project as described in the Contract Documents.

Secure: Obtain.

Subcontractor: A person, firm, or corporation duly licensed in the State of California who has a contract with the ESCO to furnish labor, materials and equipment, and/or to install materials and equipment for work in this Contract.

2. PROJECT MANAGER

a. Role and Responsibilities

The Project Manager is responsible for the general oversight of all the working drawings, technical Specifications, sketches and other information necessary to define the work covered by these Contract Documents as generated by the ESCO. The Project Manager shall visit, inspect and observe the construction to determine general compliance with the Contract Documents. The Project Manager shall evaluate the shop drawings, samples and other submittals required in the technical Specifications, and maintain an up-to-date log of all such items processed. The Project Manager will consult with the District, ESCO, and any state, county or city agency having jurisdiction over the work whenever necessary to further the best interests of the Project.

b. Disputes

Should any dispute arise respecting interpretation of the drawings and Specifications, the value of any work done or of any work omitted, or of any extra work which ESCO may be required to do or respecting the size of any payment to ESCO during the performance of this Contract, the dispute shall be decided by the Project Manager, and the Project Manager's decision shall be final and conclusive.

3. CONTRACT DOCUMENTS

a. Contents and Precedence

The Contract Documents consist of the executed Contract and all Addenda, all approved change orders, the completed Request for Proposals Form, the required Bonds and the Insurance forms, the Request for Proposals, the Notice of Award, the Notice to Proceed, the General Conditions, any supplemental Conditions, the Technical Specifications, and the Drawings. The Contract Documents are complementary and anything required by one shall be as binding as if required by all. In case of conflicts within the Contract Documents, the order of precedence of interpretation shall be as listed above, with the executed Contract and any change order thereto having priority, and subsequent Addenda having priority over prior Addenda only to the extent modified by the subsequent Addenda. In case of conflict within the drawings, larger scale drawings shall govern smaller scale drawings, and written dimensions shall govern over scaled dimensions.

b. Ambiguities, Errors, and Inconsistencies

If, in the opinion of the ESCO, the construction details indicated on the drawings or otherwise specified are in conflict with accepted industry standards for quality construction and therefore might interfere with its full guarantee of the work involved, the ESCO shall promptly bring this information to the attention of the Project Manager for appropriate action before submittal of the proposal. ESCO's failure to request clarification or interpretation of an apparent ambiguity, error or inconsistency waives that ESCO's right to thereafter claim any entitlement to additional compensation based upon an ambiguity, inconsistency, or error, which should have been discovered by a reasonably prudent ESCO, subject to the limitations of Public Contract Code §1104. During the Project, should any discrepancy appear or any misunderstanding arise as to the import of anything contained in the Contract Documents, the matter shall be promptly referred to the Project Manager, who will issue instructions or corrections.

c. Lines and Planes

All lines and planes appearing on contract drawings to be horizontal or vertical and not explicitly indicated otherwise shall be constructed true and plumb. All lines and planes appearing on contract drawings to intersect at right angles and not explicitly indicated otherwise shall be constructed at true right angles. Where details are indicated covering specific conditions, such details also apply to all similar conditions not specifically indicated.

d. Standards

The specification standards of the various sections of the Specifications shall be the procedural, performance, and material standards of the applicable association publications identified and shall be the required level of installation, materials, workmanship, and performance for the applicable work. Except where a specific date of issue is mentioned hereinafter, references to specification standards shall mean the edition, including amendments and supplements, in effect on the date of the Request for Proposals. Where no standard is identified and a manufacturer is specified, the manufacturer's specifications are the standards. All standards shall be subordinate to the requirements of the applicable codes and regulations.

e. Reference to the Singular

Wherever in the Specifications an article, device or piece of equipment is referred to in the singular number; such reference shall include as many such items as are shown on Drawings or required to complete the installation.

4. INTENT OF DRAWINGS AND SPECIFICATIONS

a. Drawings and Specifications are to be read as an integrated document. The ESCO shall promptly report to the Project Manager any ambiguities, discrepancies, or errors which come to the ESCO's attention.

b. Figured dimensions shall be followed in preference to scaled dimensions, and the ESCO shall make all additional measurements necessary for the work and shall be responsible for their accuracy. Before ordering any material or doing any work, the ESCO shall verify all measurements at the Project site and shall be responsible for the correctness of same.

c. It is the intent of the drawings and Specifications to show and describe complete installations. Items shown but not specified, or specified but not shown, shall be included unless specifically omitted.

d. The Specifications shall be deemed to include and require everything necessary and reasonably incidental to the completion of all work described and indicated on the drawings, whether particularly mentioned or shown, or not.

5. TRADE DIVISIONS

Segregation of the Specifications into the designated trade divisions is only for the purpose of facilitating descriptions and shall not be considered as limiting the work of any subcontract or trade. Subject to other necessary provisions set forth in the Specifications, the terms and conditions of such limitations or inclusions shall lie solely between the ESCO and its Subcontractors. "Scope" as indicated in each section of the Specifications shall serve only as a general guide to what is included in that section. Neither the stated description nor the division of the plans and Specifications to various sections, which is done solely for convenience, shall be deemed to limit the work required, divide or indicate it by labor jurisdiction or trade practice, or set up any bidding barriers to the various Subcontractors or suppliers.

a. The ESCO shall be responsible for the proper execution of all work required by the Contract Documents and for allocating such portions as the ESCO sees fit to the various Subcontractors, subject to applicable law. The ESCO is cautioned that the various individual sections may not contain all work that the ESCO may wish to allocate to a particular Subcontractor or everything bearing on the work of a particular trade, some of which may appear in other portions of the plans or Specifications.

b. If the ESCO elects to enter into any subcontract for any section of the work the ESCO assumes all responsibility for ascertaining that the Subcontractor for the work is competent, licensed, solvent, thoroughly acquainted with all conditions and legal requirements of the work, has included all materials and appurtenances in connection therewith in the subcontract, and has performed its work in strict compliance with the Contract Documents.

c. It shall be the responsibility of the ESCO to notify each prospective Subcontractor at the time of request for proposals of all portions of the Contract Documents, including the General Conditions, Supplementary Conditions and any parts of sections of Specifications or plans that the ESCO intends to include as part of the subcontract.

6. MASTER MANDATORY PROVISIONS

a. Any material, item, or piece of equipment mentioned, listed or indicated without definition of quality, shall be consistent with the quality of adjacent or related materials, items, or pieces of equipment on the Project and in accordance with best practices.

b. Any method of installation, finish, or workmanship of an operation called for, without definition of standard of workmanship, shall be followed or performed and finished in accordance with best practices and consistent with adjacent or related installations on the Project.

c. Any necessary material, item, piece of equipment or operation not called for but reasonably implied as necessary for proper completion of the work shall be furnished, installed or performed and finished; and shall be consistent with adjacent or related materials, items, or pieces of equipment on the Project, and in accordance with best practices.

d. Names or numbered products are to be used according to the manufacturers' directions or recommendations unless otherwise specified.

7. ESCO

a. The ESCO shall perform all the work and activities required by the Contract Documents and furnish all labor, materials, equipment, tools and appurtenances necessary to perform the work and complete it to the District's satisfaction within the time specified. The ESCO shall at all times perform the work of this Contract in a competent and workmanlike manner and, if not specifically stated, accomplish the work according to the best standards of construction practice. The ESCO in no way is relieved of any responsibility by the activities of the Project Manager, engineer, inspector or DSA in the performance of such duties.

b. The ESCO shall employ a full-time competent superintendent and necessary assistants who shall have complete authority to act for the ESCO on all matters pertaining to the work. The superintendent shall be satisfactory to the District and, if not satisfactory, shall be replaced by the ESCO with one that is acceptable. Also, the superintendent shall not be changed without the written consent of the District unless the superintendent ceases to be employed by the ESCO.

c. ESCO shall make the layout of lines and elevations and shall be responsible for the accuracy of both the ESCO's and the Sub-contractors' work resulting there from. All dimensions affecting proper fabrication and installation of all Contract work must be verified by the ESCO prior to fabrication and installation by taking field measurements of the true conditions. The ESCO shall take, and assist Subcontractors in taking, all field dimensions required in performance of the work, and shall verify all dimensions and conditions on the site. If there are any discrepancies between dimensions in drawings and existing conditions which will affect the work, the ESCO shall promptly bring such discrepancies to the attention of the Project Manager for adjustment before proceeding with the work. ESCO shall be responsible for the proper fitting of all work and for the coordination of all trades, Subcontractors and persons engaged upon this Contract.

d. ESCO shall do all cutting, fitting, or patching of ESCO's work that may be required to make its several parts come together properly and fit it to receive or be received by work of other ESCOs as shown, or reasonably implied by, the drawings and Specifications for the completed work. Any cost incurred by the District due to defective or ill-timed work shall be borne by the ESCO.

8. RESPONSIBILITY OF ESCO

a. ESCO shall be held strictly responsible for the proper performance of all work covered by the Contract Documents, including all work performed by Subcontractors. All work performed under this Contract shall comply in every respect to the rules and regulations of all agencies having jurisdiction over the Project or any part thereof.

b. ESCO shall perform the duties and submit Verified Reports as defined in Sections 4-336 and 4-343 (c), Group 1, Chapter 4, Part I, Title 24, California Code of Regulations ("CCR"). The duties of the ESCO are as defined in Section 4-343, Group 1, Chapter 4, Part I, Title 24, of the CCR. ESCO shall keep and make available a copy of Title 24 of the CCR at the job site at all times.

c. Where, because of short supply, any item of fabricated materials and/or equipment, indicated on drawings or specified, is unobtainable and it becomes necessary, with the consent of the Project Manager, to substitute equivalent items differing in details or design, the ESCO shall promptly submit complete drawings and details indicating the necessary modifications of the work. This provision shall be governed by the terms of the General Conditions regarding Submittals: Shop Drawings, Cuts and Samples.

d. With respect to work performed at and near a school site, ESCO shall at all times take all appropriate measures to ensure the security and safety of students and staff, including, but not limited to, ensuring that all of ESCO's employees, Subcontractors, and suppliers entering school property strictly adhere to all applicable District policies and procedures, e.g., sign-in requirements, visitor badges, and access limitations.

9. SUBCONTRACTORS

a. Nothing contained in the Contract Documents shall create any contractual relationship between any Subcontractor and the District. The District shall be deemed to be the third party beneficiary of the contract between the ESCO and each Subcontractor. If the ESCO does not specify a Subcontractor for any portion of the work to be performed under this Contract, as required by law, ESCO shall perform that portion of the work with its own forces. The ESCO shall not substitute any other person or firm as a Subcontractor for those listed in the proposal submitted by the ESCO, without the written approval of the District and in conformance with the requirements of the Public Contract Code. The District reserves the right of approval of all Subcontractors proposed for use on this Project, and to this end, may require financial, performance, and such additional information as is needed to secure this approval. If a Subcontractor is not approved, the ESCO shall promptly submit another firm of the same trade for approval.

b. The ESCO shall insert appropriate provisions in all subcontracts pertaining to work on this Project requiring the Subcontractors to be bound by all applicable terms of the Contract Documents. The ESCO shall be as fully responsible for the acts and omissions of the Subcontractors, and of persons either directly or indirectly employed by them, as the ESCO is for the acts and omissions of persons directly employed by the ESCO.

10. PERFORMANCE AND PAYMENT BONDS

a. As directed in the Notice of Award, the ESCO shall file with the District the following bonds, using the bond forms provided with these Contract Documents:

1) A corporate surety bond, in a sum not less than 100 percent of the amount of the Contract, to guarantee the faithful performance of the Contract, substantially in form of **Appendix D**, attached hereto.

2) A corporate surety bond, in a sum not less than 100 percent of the amount of the Contract, to guarantee the payment of wages for services engaged and of bills contracted for materials, supplies, and equipment used in the performance of the Contract, substantially in the form of **Appendix F**, attached hereto.

b. Corporate sureties on these bonds and on bonds accompanying proposals must be admitted sureties as defined by law, legally authorized to engage in the business of furnishing surety bonds in the State of California. All sureties and bond forms must be satisfactory to the District. Failure to submit the required bonds within the time specified by the Notice of Award, using the forms provided by the District, may result in cancellation of the award of Contract.

c. The amount of the Contract, as used to determine the amounts of the bonds, shall be the total amount fixed in the ESCO's proposal for the performance of the required work.

d. During the period covered by the Contract, if any of the sureties upon the bonds shall become insolvent or unable, in the opinion of the District, to pay promptly the amount of such bonds to the extent to which surety might be liable, the ESCO, within thirty (30) days after notice given by the District to the ESCO, shall provide supplemental bonds or otherwise substitute another and sufficient surety approved by the District in place of the surety becoming insolvent or unable to pay. If the ESCO fails within such thirty (30) day period to substitute another and sufficient surety, the ESCO shall, if the District so elects, be deemed to be in default in the performance of its obligations hereunder, and the District, in addition to any and all other remedies, may terminate the Contract or bring any proper suit or other proceedings against the ESCO and the sureties or any of them, or may deduct from any monies then due or which thereafter may become due to the ESCO under the Contract, the amount for which the surety, insolvent or unable to pay, shall have been liable on the bonds, and the monies so deducted shall be held by the District as collateral security for the performance of the conditions of the bonds.

e. Provide one electronic copy and two hard copy set of bonds to the Project Manager to send to the District for signature.

11. INSURANCE

a. ESCO shall obtain the following insurance from a company or companies acceptable to the District. All required insurance must be written by a company licensed to do business in the State of California at the time the policy is issued. All required insurance shall be equal to or exceed an A VIII rating as listed in Best's Insurance Guides' latest edition. On a case-by-case basis, the District may accept insurance written by a company listed on the State of California Department of Insurance List of Eligible Surplus Lines ("LESLI List") with a rating of A VIII or above as listed in Best's Insurance Guides' latest edition. Required documentation of such insurance shall be furnished to the District within the time stated in the Notice of Award. ESCO shall not commence work nor shall it allow its employees or Subcontractors or anyone to

commence work until all insurance required hereunder has been submitted and approved in writing by the District and a notice to proceed has been issued.

b. ESCO shall take out and maintain at all times during the life of this Contract, up to the date of acceptance of the work by the District, the following policies of insurance:

1). General Liability Insurance: Personal injury and replacement value property damage insurance for all activities of the ESCO and its Subcontractors arising out of or in connection with this Contract, written on a comprehensive general liability form including ESCO's protected coverage, blanket contractual, completed operations, vehicle coverage and employer's non-ownership liability coverage, in an amount no less than either

a. $1,000,000.00 combined single limit personal injury and property damage for each occurrence and $2,000,000.00 annual aggregate with a $0 umbrella/excess; or

b. $2,000,000.00 annual combined single limit

2). Builders' Risk Insurance: If contract amount exceeds $225,000.00, ESCO shall procure and maintain builders' risk insurance (all-risk coverage) for an amount equal to one hundred percent of the Contract sum for the benefit of the District, and the ESCO and Subcontractors as their interest may appear. In projects involving no structural change or building construction, this requirement may be waived in writing, at the District's sole option.

These policies shall include the following coverage:

1). The inclusion of more than one insured shall not operate to impair the rights of one insured against another insured and the coverages afforded shall apply as though separate policies have been issued to each insured.

2). This policy does not exclude explosion, collapse, underground excavation hazard, or removal of lateral support.

c. Endorsements:

1). The certificate(s) for both the General Liability Policy and the Automobile Liability Policy, as well the Builders' Risk Policy if required above, shall be endorsed with the following specific language:

"Fieldbrook Elementary School District is named as an additional insured for all liability arising out of the operations by or on behalf of the named insured, and this policy protects the additional insured, its officers, agents and employees against liability for bodily injuries, death or property damage or destruction arising in any respect directly or indirectly in the performance of the Contract."

2) The certificates must state that the insurance is under an occurrence based, and not a claims-made policy (policies). Both the General Liability Policy and the Builders' Risk Policy specified above shall be endorsed with the following specific language:

a. The insurance provided herein is primary and no insurance held or owned by the District shall be called upon to contribute to a loss.

b. Coverage provided by this policy shall not be reduced or canceled without thirty (30) days written notice given to the District by certified mail.

d. Professional Liability Insurance for Engineer of Record (Errors and Omissions):

ESCO shall maintain in force for the period covered by this Agreement, professional liability (errors and omissions) insurance covering the Engineer of Record's activities, in the amount not less than $2,000,000 with an insurance carrier satisfactory to District. In addition, to the extent that the activities and services of engineers or consultants retained by ESCO are not covered under ESCO's professional liability insurance, ESCO shall require each engineer and consultant to obtain and maintain a policy of professional liability insurance in an amount of not less than $2,000,000 with an insurance carrier satisfactory to District, before commencing services on the Project. ESCO shall provide a copy of the insurance policies to the District upon request.

e. Automobile Liability Insurance:

ESCO shall maintain in force for the period covered by this Agreement, automobile liability insurance covering bodily injury and property damage in an amount no less than $1,000,000 combined single limit for each occurrence; $2,000,000 aggregate. Said insurance shall include coverage for owned, hired, rented, and non-owned vehicles. All certificates must state that the insurance is under an occurrence based, and not a claims-made policy (policies).

f. Documentation:

Within ten (10) calendar days following issuance of the Notice of Award of the Contract, the following documentation of insurance shall be submitted to the Project Manager electronically to send to the District for approval prior to issuance of the Notice to Proceed: signed certificates of insurance showing the limits of insurance provided and copies of the specified endorsements for each policy. Certified copies of all policies shall be provided to the District upon request.

g.

If the ESCO fails to maintain such insurance, the District may take out such insurance to cover any damages for which the District might be held liable on account of the ESCO's failure to pay such damages, and deduct and retain the amount of the premiums from any sums due the ESCO under the Contract.

h. Workers' Compensation Insurance:

1). Within ten (10) calendar days following issuance of the Notice of Award of the Contract, the ESCO shall submit to Project Manager electronically in order to send to the District satisfactory proof that the ESCO and all Subcontractors it intends to employ have procured, for the period covered by the Contract, full Workers' Compensation insurance and employer's liability with limits of at least $1,000,000 with an insurance carrier satisfactory to the District for all persons whom the ESCO may employ in carrying out the work contemplated under this Contract in accordance with the Workers' Compensation Insurance and Safety Act, approved May 26, 1913, and all acts amendatory or supplemental thereto (the "Act"). Such insurance shall be maintained in full force and effect during the period covered by the Contract. In the event the ESCO is self-insured, ESCO shall furnish a Certificate of Permission to Self-Insure, signed by the Department of Industrial Relations Administration of Self-Insurance, Sacramento, California.

2). If the ESCO fails to maintain such insurance, the District may take out worker's compensation insurance to cover any compensation which the District might be liable to pay under the provisions of the Act, by reason of any employee of the ESCO being injured or

killed, and deduct and retain the amount of the premiums for such insurance from any sums due the ESCO under the Contract, or otherwise recover that amount from the ESCO or the Surety.

3). If an injury occurs to any employee of the ESCO for which the employee, or the employee's dependents in the event of the employee's death, is entitled to compensation under the provisions of the Act, or for which compensation is claimed from the District, the District may retain from the sums due the ESCO under this Contract an amount sufficient to cover such compensation, as fixed by the Act, until such compensation is paid, or until it is determined that no compensation is due, and if the District is compelled to pay such compensation, it will deduct and retain from such sums the amount so paid, or otherwise recover this sum from the ESCO or its Surety.

4). The policies represented by the certificates shall be endorsed with a Waiver of Subrogation and must contain the provision (and the certificates must so state) that the insurance cannot be canceled until thirty (30) days after written notice of intended cancellation has been given to the District by certified mail.

12. CODES AND REGULATIONS

a. The ESCO shall be knowledgeable regarding and shall comply with applicable portions of California Code of Regulations Title 24, the applicable Building Code, and all other codes, ordinances, regulations or orders of properly constituted authority having jurisdiction over the work of this Project. The ESCO shall examine the Contract Documents for compliance with these codes and regulations, and shall promptly notify the Project Manager of any discrepancies.

b. All work and materials shall be in full accordance with the latest rules and regulations of the Safety Orders of the Division of Industrial Safety, the National Electric Code, the Uniform Plumbing Code published by the Western Plumbing Officials Association, and other applicable State laws or regulations. Nothing in the Project plans or Specifications is to be construed to permit work not conforming to the applicable Codes. Buildings and/or all other construction covered by this Contract shall meet all the regulations for access by the physically handicapped as administered by the Division of the State Architect, and as may be required by federal or state law.

c. If the work under this Contract is for the construction of a school building as defined by the Education Code, then the following provisions shall apply to the Contract:

1). All work shall be executed in accordance with the current requirements of Sections 17280 et seq. or Sections 81130 of the Education Code and California Code of Regulations: Title 24 and Title 19. No deviations from the DSA approved plans and Specifications will be permitted except upon a Change Order or Addenda, signed by the District and Architect and approved by the Division of the State Architect and the State Fire Marshal, if applicable.

2). Prior to the start of construction, District shall employ a Project Inspector, approved by the Division of the State Architect, to provide inspection services as defined in Tile 24, California Code of Regulations and pursuant to Section 17311 of the Education Code. The Owner shall pay for the costs of the project inspection services, except as indicated in the General Conditions, Article 38 and the plans and Specifications. A copy of current California Code of Regulations Title 24, approved sets of plans and Specifications, addenda and change orders, shall be kept by the School District Job Inspector on the job at all times

during construction. Division of the State Architect shall be notified 48 hours in advance of the first pour of concrete.

13. PERMITS AND TAXES

a. The ESCO shall obtain and pay for all permits, fees and licenses that are required in order to perform the work under this Contract. The District shall pay connection charges and meter costs for new permanent utilities required by these Contract Documents. The ESCO shall notify the District sufficiently in advance to submit requests for service to the appropriate utility companies so as to insure connections or installation of utility services in accordance with the Project schedule.

b. The ESCO shall pay for all taxes on materials and equipment. The District is exempt from Federal Excise Tax. ESCO shall not pay Federal Excise Tax on any item in this Contract.

14. PATENTS AND ROYALTIES

All fees or claims for patents, royalties or licenses on materials, equipment or processes used in the performance of work on this Project shall be included in the amount of the proposal. The ESCO shall indemnify, defend, and hold harmless the District, its Governing Board, the Project Manager, and their officers and employees, from all claims or liability, including costs and expenses, which may arise from the use on this Project of any patented or copyrighted materials, equipment, or processes.

15. SAFETY AND FIRE PREVENTION

a. The ESCO, Subcontractors and all of their agents and employees shall fully comply with all of the provisions and requirements of CAL/OSHA, Title 8, California Code of Regulations, and all other safety codes applicable to the Project. The ESCO shall take thorough precautions at all times for the protection of persons and property, and shall be liable for all damages to persons or property, either on or off the site, which occur as a result of ESCO's prosecution of the work. The ESCO shall obtain permits for, install and maintain in safe condition barricades, walkways, fences, railings, and whatever other safeguards that may be necessary to protect persons and property from damage as a result of the construction under this Contract.

b. ESCO is required to ensure Material Safety Data Sheets ("MSDS") are available in a readily accessible place at the work site for any material requiring a MSDS pursuant to the federal "Hazard Communication" standard or employee "right to know" laws. ESCO is also required to ensure proper labeling on materials brought on the job site such that any person working with the material or within the general area of the material is informed of the hazards of the material and follows proper handling and protection procedures. A copy of the MSDS shall also be promptly submitted directly to the District.

c. ESCO shall not endanger any work by cutting, excavating, or otherwise altering the work and shall not cut or alter the work of any other ESCO except with the written consent of the Project Manager, nor overload any new or existing structures by the placing or storage of materials, equipment, or other items thereon, and, if necessary, shall provide calculations proving the safety in so doing.

d. If it is necessary to work at night, or where daylight is obscured, the ESCO shall provide and maintain lighting of an adequate level to properly prosecute the work, to permit the thorough inspection of same, and to ensure the safety to workers and others.

e. ESCO shall take extraordinary care to prevent fires and keep all flammable materials and oily rags in tightly closed metal containers. ESCO shall exercise particular care when welding or cutting, and with regard to the disposition of waste materials, the nature and quantity of which might create or increase a fire hazard.

16. HAZARDOUS MATERIALS

Unless otherwise specified, this Contract does not include the removal, handling, or disturbance of any hazardous substances or materials encountered in the new construction or on the Project grounds. If such substances or materials are encountered, work shall cease in that area and the District shall be promptly notified to take appropriate action for removal or otherwise abating the condition in accordance with current regulations applicable to the District.

a. General

1). No asbestos, asbestos-containing products or other hazardous materials shall be used in this construction or in any tools, devices, clothing or equipment used to further this construction.

2). Asbestos and/or asbestos containing products shall be defined as all items containing but not limited to chrysotile, crocidolite, amosite, anthophyllite, tremo-lite or actinolite.

3). Any or all material containing greater than one tenth of one percent (>.1%) asbestos shall be defined as asbestos-containing material.

4). Any disputes involving the question of whether or not material contains asbestos shall be settled by electron microscopy; the cost of any such tests shall be paid by the ESCO.

5). All work or materials found to contain asbestos or work or material installed with asbestos containing equipment will be immediately rejected and this work shall be removed by the ESCO at no additional cost to the District.

b. Decontamination and Removal of hazardous material from prior work

1). Decontamination and removal of work found to contain asbestos or work installed with asbestos containing equipment shall be done only under the supervision of a qualified consultant, knowledgeable in the field of asbestos abatement and accredited by the Environmental Protection Agency ("EPA").

2). The asbestos removal ESCO shall be an EPA-accredited ESCO qualified in the removal of asbestos subject to approval of the District. 3) The asbestos consultant shall be chosen and approved by the District which shall have sole discretion and final determination in this matter.

4). The work will not be accepted until asbestos contamination is reduced to levels deemed acceptable by the asbestos consultant.

c. Hold Harmless

1). Interface of work under this contract with work containing asbestos shall be executed by the ESCO at ESCO's risk and at ESCO's discretion with full knowledge of the currently accepted standards, hazards, risks and liabilities associated with asbestos work and asbestos containing products. By execution of this contract the ESCO acknowledges the above and agrees to hold harmless, as set forth in the indemnity provisions of this Contract, the Owner,

its employees, agents and assigns for all asbestos liability which may be associated with this work and agrees to instruct ESCO's employees and agents with respect to the above mentioned standards, hazards, risks and liabilities.

2). The ESCO shall, prior to commencement of this work, provide a duly signed and notarized affidavit that ESCO has instructed ESCO's employees and agents with respect to the above mentioned standards, hazards, risks and liabilities and the contents and requirements of this portion of the Contract Documents.

d. Certification

The ESCO agrees that materials containing asbestos or other hazardous materials as defined in Federal and State law shall not be used in construction.

17. TEMPORARY FACILITIES

a. The ESCO shall obtain permits for, install and maintain in safe condition all scaffolds, hoisting equipment, barricades, walkways, or other temporary structures that may be required to accomplish the work. Such structures shall be adequate for the intended use and capable of safely accepting all loads that may be imposed upon them. They shall be installed and maintained in accordance with all applicable codes and regulations.

b. The ESCO shall provide and maintain temporary heat from an approved source whenever in the course of the work it may become necessary for curing, drying or warming spaces as may be required for the proper installation of materials or finishes. The ESCO shall provide and maintain any and all facilities that may be required for dewatering in order that work may proceed on the project. If it is necessary for dewatering to occur continually, the ESCO shall have on hand whatever spare parts or equipment that may be required to avoid interruption of service or work.

c. The ESCO shall promptly remove all such temporary facilities when they are no longer needed for the work or on completion of the project. The ESCO shall repair any damage to premises or property which resulted from the construction, use, or removal of temporary facilities and shall restore the premises and property to their original condition.

d. See the Supplemental General Conditions and/or specifications for requirements concerning temporary sanitary facilities and utilities.

18. SIGNS

No signs may be displayed on or about the District's property (except those which may be required by law) without the District's prior written approval of size, content and location. Any signs required by the District will be designated in the Supplemental General Conditions.

19. TIME

a. The ESCO shall commence the work on the date indicated in the Notice to Proceed. Time is of the essence regarding the Contract work, and the ESCO shall prosecute the work diligently and regularly at such a rate of progress as to ensure completion of this Project within, or sooner than, the time specified.

b. The ESCOs and Subcontractors shall investigate and become aware of the amount of time required for the delivery of all equipment and materials required to perform the work under

this Contract, and no extension of time shall be granted due to failure to order the equipment and materials sufficiently before their incorporation into the work so as to avoid delay to the Project.

c. The ESCO and Subcontractors shall provide and maintain enough manpower, materials and equipment to ensure a rate of construction progress that will complete the Project within or sooner than the time specified and according to the schedule of work. If, in the District's opinion, the ESCO and/or Subcontractors are not prosecuting the work at a sufficient rate of progress to meet the Project schedule, the District may direct the ESCO to provide additional manpower, materials or equipment, or to work additional hours, holidays or weekends without additional cost to the District until the work is progressing in a manner satisfactory to the District. Failure to prosecute the work in a timely manner according to the Project schedule is considered a breach of Contract and shall be cause for termination of the Contract.

20. PRE CONSTRUCTION & CONSTRUCTION SCHEDULE

a. Within fifteen (15) calendar days after the Notice of Award of Contract, the ESCO shall prepare and submit to the Project Manager and District an electronic version of the as planned construction schedule showing in detail how the ESCO plans to prosecute the work within the time set for Final Completion. The schedule shall include the work of all trades necessary for construction of the Project, and shall be sufficiently complete and comprehensive to enable progress to be monitored on a day-by-day basis. The information for each activity shall include at a minimum the activity description, duration, start date and completion date.

b. The ESCO shall take care in the preparation of the schedule to ensure that it represents an accurate and efficient plan for accomplishing the work. If the Project is more than one week behind schedule, it must be promptly revised showing how the ESCO plans to complete the work, but in no case shall it show a completion date later than that required by the Contract, unless a time extension has been granted. The current schedule shall be kept posted in the ESCO's project office on site.

c. The ESCO shall be responsible for the coordination of all work necessary and pertaining to the construction whether actually a part of this Contract or attendant thereto. The ESCO shall notify the District and various utility companies, as far as possible in advance of their required work, in order that work schedules may be developed for all concerned, which will permit the most effective and timely accomplishment of the entire project.

21. DELAYS AND TIME EXTENSIONS

a. The ESCO may be granted a time extension if the ESCO encounters an unavoidable delay of the work due to causes completely beyond the ESCO's control and which the ESCO could not have avoided by the exercise of reasonable care, prudence, foresight and diligence. Causes for which a claim for extension of time may be made include: acts of the public enemy, acts of another ESCO in the performance of another contract with the District, priority of a governmental agency for materials or equipment, fire, flood, violent wind storm, epidemic, quarantine restriction, strike, freight embargo, or weather of an unusually severe nature. The ESCO will not be granted time extensions for weather conditions which are normal for the location of the Project, according to the U. S. Weather Bureau Records.

b. A request for extension of time and compensation related thereto shall be made in writing to the Project Manager and District within ten (10) calendar days of the date the delay is encountered, or shall be deemed waived. The request shall include a detailed description of the reasons for the delay and corrective measures by the ESCO. The request shall be accompanied

by evidence that the insurance policies required by the Contract shall be in effect during the requested additional period of time. In order for the Project Manager to consider a request for time extension, the ESCO must prove that the reasons stated for the delay actually caused a delay in portions of the work which will result in completion beyond the date specified in the Contract. The ESCO may also be granted a time extension for a significant change in the scope of work which request for extension of time shall be included in a Contract modification proposal.

c. No damages or compensation or any kind shall be paid to an ESCO because of delays in the progress of work, whether such delays be avoidable or unavoidable, that are not the responsibility of District. District's liability to ESCO for delays for which District is responsible shall be limited to an extension of time unless such delays were unreasonable under the circumstances involved and were not within the contemplation of the parties when the Contract was awarded. The ESCO shall provide to the District the actual, substantiated costs to ESCO for which the ESCO may claim damages from District. Such costs, if any, shall be directly related to the Project, and shall not include costs that would be borne by the ESCO in the regular course of business, including, but not limited to, office overhead and ongoing insurance costs. Delay damages shall not include ESCO or Subcontractor markup for overhead and profit, but only actual, documented, and direct actual costs. The District shall not be liable for any damages which the ESCO could have avoided by any reasonable means including, but not limited to, the more judicious handling of forces or equipment.

d. The granting of an extension of time because of unavoidable delays shall in no way operate as a waiver on the part of the District of the right to collect liquidated damages for other delays or of any other rights to which the District is entitled.

22. LIQUIDATED DAMAGES

a. Should the ESCO fail to achieve Final Completion of this Contract within the time fixed for Final Completion, together with extensions granted by the District for unavoidable delays, ESCO shall become liable to the District in the amount specified in the Contract per calendar day for each day the Contract remains incomplete beyond the time for Final Completion, as liquidated damages and not as a penalty. ESCO may also be assessed liquidated damages for failure to meet milestones specified in the Contract Documents, regardless of impact on overall Project completion. ESCO shall not be charged with liquidated damages when the delay in completion of the work beyond the time for Final Completion is due to acts of the District. It is expressly stipulated and agreed by ESCO and District that it would be impractical and extremely difficult to fix the actual amount of damages.

b. In addition to any liquidated damages which may be assessed, if Contractor fails to achieve Final Completion of this Contract within the time fixed for Final Completion, together with extensions granted by the District for unavoidable delays, and if as a result District finds it necessary to incur any costs and/or expenses, or if District receives any claims by other contractors, subcontractors, or third parties claiming time or other compensation by reason of Contractor's failure to complete work on time, Contractor shall pay all those costs and expenses incurred by District. These costs and expenses may include but are not limited to such items as rental payments, inspection fees, and additional architectural fees, whether related to the acquisition of facilities or caused by the delay in completion.

c. Any money due or to become due the ESCO may be retained to cover liquidated damages. Should such money not be sufficient to cover the liquidated damages, the District shall have the right to recover the balance from the ESCO or ESCO's sureties.

d. Should the District authorize suspension of the work for any cause, the time work is suspended will be added to the time for completion. Suspension of the work by the District shall not be a waiver of the right to claim liquidated damages as set forth in this section.

e. The assessment of Liquidated Damages does not otherwise limit the right of the Owner to claim a loss or damages incurred by the Owner for reasons other than delay (e.g. damages due to defective work).

23. DISTRICT'S RIGHT TO STOP WORK; TERMINATION OR SUSPENSION OF THE CONTRACT

a. District's Right to Stop Work:

In addition to or as an alternative to any and all other remedies available to the District, if the ESCO fails to correct work which is not performed in accordance with the Contract Documents, or if the ESCO persistently fails to perform the work in accordance with the Contract Documents, the District may by written order direct the ESCO to stop the work, or any portion thereof, until the cause for such order has been eliminated to the satisfaction of the District. However, the right of the District to stop the work shall not give rise to a duty on the part of the District to exercise this right for the benefit of the ESCO or any other person or entity, and the failure of the District to do so shall not be raised as a defense to the ESCO's failure to perform the work in accordance with the Contract Documents.

b. Termination for Cause:

1). If the ESCO refuses or fails to furnish sufficient materials, work force, equipment, and appurtenances to properly prosecute the work in a timely manner, or if ESCO refuses or fails to comply with any provisions of the Contract Documents, or if ESCO should file a bankruptcy petition or make a general assignment for the benefit of ESCO's creditors or if a receiver should be appointed on account of ESCO's insolvency, then the District may give the ESCO and ESCO's Surety written notice of intention to terminate the Contract. Unless within seven (7) calendar days after the serving of such notice upon the ESCO and ESCO's Surety such violation shall cease and arrangements for correction of such conditions shall be made satisfactory to the District, the Contract shall cease and terminate. In the event of such termination, the District shall immediately serve written notice thereof upon the ESCO and ESCO's Surety.

2). In the event of termination for cause, in addition to all remedies available to the District, the ESCO's Surety shall have the right to take over and perform the Contract; provided, however, that if the Surety does not commence performance within five (5) calendar days from the date of the issuance of such notice of termination, the District may take over the work and prosecute the same to completion by letting another Contract, or by any other method that the District deems advisable. The ESCO and ESCO's Surety shall be liable for any excess cost incurred by the District thereby, and in any such event the District may take possession of such materials, equipment, and other property belonging to the ESCO as may be on the site and use same in completing the work.

c. Termination or Suspension for Convenience:

The District reserves the right, in its sole discretion, to terminate or suspend all or part of the Contract for convenience following three (3) days written notice to the ESCO. In the event of

termination or suspension for convenience, ESCO shall have no claims against the District, except:

1). The actual cost of labor, materials and services provided pursuant to the Contract, and which have not yet been paid for, as documented by timesheets, invoices, receipts and the like; and

2). Five percent (5%) of the total cost of the work performed as of the date of notice of termination or suspension or five percent (5%) of the value of the work yet to be completed, whichever is less. The parties agree that this amount shall constitute full and fair compensation for all ESCO's lost profits and other damages resulting from the termination or suspension for convenience.

24. ASSIGNMENT OF CONTRACT

The ESCO may not assign or delegate all or any portion of this Contract without the written consent of the District and no such consent shall be given which would relieve the ESCO or its Surety of their responsibilities under the Contract. The ESCO may assign, without liability to the District, monies due the ESCO under the Contract to banks, trust companies or other financial institutions provided written notice thereof is promptly delivered to the District. Assignment of monies earned by the ESCO shall be subject to the same retention as other payments made to ESCO, and shall also be subject to setoffs and back charges as provided by this Contract.

25. COORDINATION WITH OTHER CONTRACTS

a. The District reserves the right to do other work or award other contracts in connection with this Project. By entering into this Contract, ESCO acknowledges that there may be other ESCOs on or adjacent to the Project site whose work must be coordinated with that of its own. ESCO expressly warrants and agrees that it will cooperate with other ESCOs and will do nothing to delay, hinder, or interfere with the work of other ESCOs, or that of the District, its Project Manager and Construction Manager. ESCO also expressly agrees that in the event its work is hindered, delayed, interfered with, or otherwise affected by a separate ESCO, its sole remedy will be a direct action against the separate ESCO. To the extent allowed by law, the ESCO expressly waives any remedy against the District, its Project Manager and Construction Manager on account of delay, hindrance, interference or other such events caused by a separate ESCO.

b. If any part of ESCO's work depends upon the work of a separate ESCO, ESCO shall inspect such other work and promptly report in writing to the District and Project Manager any defects in such other work that render it unsuitable to receive the work of ESCO. Failure of the ESCO to so inspect and report shall constitute an acceptance of the other ESCO's work, except as to defects which the ESCO could not have detected through the reasonable inspection of the other ESCO's work prior to the execution of ESCO's work.

c. If ESCO is aware of a current or potential conflict between ESCO’s work and the work of another ESCO on the site, and is unable to informally resolve the conflict directly with the other ESCO, ESCO shall promptly provide written notice to the District, with a copy to the Project Manager and the other ESCO, specifying the nature of the conflict, the date upon which the conflict arose, and the steps taken to attempt to resolve the conflict. The District may issue written instructions to address the conflict.

d. If, through ESCO's negligence, any other ESCO or Subcontractor shall suffer loss or damage to the work, ESCO shall make a reasonable effort to settle with such other ESCO and Subcontractor by agreement or arbitration. If such other ESCO or Subcontractor shall assert any claim against the District or Project Manager, on account of any damage alleged to have been so sustained, the District or Project Manager shall notify the ESCO, who shall defend such proceedings at ESCO's own expense and save harmless and indemnify the District and the Project Manager from any such claim.

26. SUBMITTALS: SHOP DRAWINGS, CUTS AND SAMPLES

a. Within fifteen (15) calendar days after the Notice of Award of Contract, one electronic copy of shop drawings, brochures and cuts and samples in quantities specified by the Project Manager shall be submitted to the Project Manager for all items for which they are required by the plans and Specifications. Prior to transmittal, the ESCO shall examine all submittals for accuracy and completeness in order to verify their suitability for the work and compliance with the Contract Documents and shall sign and date each submittal. Submittals shall be made sufficiently before the items are required for the work so as to cause no delay and shall be in accordance with the project construction schedule.

b. In addition to information furnished as common practice, submittals shall contain the Project name and location, ESCO's name and address, Subcontractor's or supplier's name and address, date of submittal and any revisions, and reference to appropriate specification section, and/or drawing and detail numbers. The ESCO and/or the Subcontractors shall verify in the field all dimensions and relationships to adjacent work necessary to ensure the proper fit of the items submitted. If necessary, the ESCO shall make any corrections required and resubmit with all due haste in the same number as initially required.

c. Review of submittals, shop drawings, cuts or samples by the District or Project Manager shall not relieve the ESCO from complying with the requirements of the Contract Documents.

d. Any materials or equipment installed without approval shall be at the ESCO's own risk, and ESCO may be required to remove any such materials or equipment and install the specified items at ESCO's own cost, including repairs to adjacent work.

27. PAYMENTS

a. Cost Breakdown:

Prior to submitting ESCO's first request for payment, the ESCO shall prepare and submit to the Project Manager and District a cost breakdown (schedule of values) showing the major work items for each trade or operation required in construction of the Project. The work items shall be sufficiently detailed to enable the Project Manager to accurately evaluate the completion percentages requested by the ESCO. The cost for each work item shall include overhead and profit. The total of all work item costs shall equal the amount of the Contract.

b. Scope of Payment:

Payment to the ESCO at the unit price or other price fixed in the Contract for performing the work required under any item or at the lump sum price fixed in the Contract for performing all the work required under the Contract, shall be full compensation for furnishing all labor, materials, equipment and tools necessary to the work, and for performing and completing, in accordance with the Specifications, all work required under the item or under the Contract, and

for all expense incurred by the ESCO for any purpose in connection with the performance and completion of the work.

c. Progress Payments:

The ESCO will, on or about the 25th day of each month, make an estimate of the value of the work completed by ESCO in the performance of the Contract. These estimates shall be subject to the review and approval of the Project Manager. The first such estimate will be of the value of the work completed after the ESCO commenced the performance of the Contract, and every subsequent estimate, except the final estimate, will be of the value of the work completed since the immediately preceding estimate. Such estimates will be based on labor, materials and equipment incorporated into the work, and items of materials and equipment delivered to the Project. The ESCO shall be responsible for the security and protection of such materials and equipment delivered to the Project and not incorporated in the work. The Governing Board has found that the Project is substantially complex and therefore requires a retention amount of 10%. Within thirty (30) calendar days after the approval of each estimate for progress payment, the District will pay to the ESCO an amount equal to ninety (90) percent of the approved estimate. Payments may at any time be withheld if in the judgment of the District the work is not proceeding in accordance with the Contract Documents, the ESCO is not complying with the requirements of the Contract, stop notices have been timely filed, the estimate contains an error, or the District has incurred costs or requests reasonable financial assurances regarding defective work by the ESCO.

d. Final Payment:

Within thirty (30) days after all required work is fully completed in accordance with the Contract Documents, the ESCO shall submit a final invoice for the total value of the work completed in accordance with the Contract, which shall be subject to review and approval by the District. As required by law, District shall pay ESCO the unpaid balance of the Contract price of the work, or the whole Contract price of the work if no progress payment has been made, determined in accordance with the terms of the Contract, less such sums as may be lawfully retained under any provision of the Contract, including, but not limited to, amounts retained as liquidated damages, for stop notices, for third-party claims for which the ESCO is required to indemnify the District, for defective work and costs incurred by the District in connection therewith, or for other such claims and damages attributable to the ESCO ("Final Payment"). Prior progress estimates and payments are subject to correction in the Final Payment. Tender of the Final Payment shall constitute denial by the District of any unresolved claim. ESCO's acceptance of the Final Payment shall operate as a full and final release to the District and its agents from any and all unasserted claims ESCO has, or may have, related to this Contract.

e. Payments Do Not Imply Acceptance of Work:

The granting of any progress payment or payments by the District or the receipt thereof by the ESCO shall not constitute acceptance of the work or of any portion thereof, and shall in no way lessen the liability of the ESCO to replace unsatisfactory work or material, whether or not the unsatisfactory character of such work or material was apparent or detected at the time such payment was made.

f. Retention of Sums Charged Against ESCO:

It is mutually understood and agreed that when under any provision of this Contract the District shall charge any sums of money against the ESCO, the amount of such charge shall be deducted and retained by the District from the amount of the next succeeding progress estimate, or from any other monies due or that may become due the ESCO on account of the Contract. If on completion or termination of the Contract such monies due the ESCO are found insufficient to cover the District's charges against the ESCO, the District shall have the right to recover the balance from the ESCO or the ESCO's Sureties.

g. Release:

The ESCO and each assignee under an assignment in effect at the time of Final Payment shall, if required by the District, execute and deliver at the time of Final Payment and as a condition precedent to Final Payment, a release in form and substance satisfactory to and containing such exemptions as may be found appropriate by the District, discharging the District, its officers, agents and employees of and from liabilities, obligations and claims arising under this Contract.

h. Payment to Subcontractors and Suppliers:

The ESCO shall pay each Subcontractor and supplier promptly on receipt of each progress payment from the District for the materials, labor and equipment delivered to the site or incorporated in the work by each Subcontractor during the period for which the progress payment is made, less any retention as provided above.

i. Stop Notice Costs:

The District reserves the right to charge the ESCO or Surety, or to withhold from release of retention, all costs incurred by the District, including attorney's fees, for processing and defending stop notice claims.

28. MODIFICATIONS OF CONTRACT

a. Changes in the Work:

1). The District, before the date of acceptance of the work, may, without notice to the Sureties, order changes in the work ("Modifications"), may order extra materials and extra work in connection with the performance of the Contract, and the ESCO shall promptly comply with such orders. All Modifications must be approved by DSA and the State Fire Marshall, if applicable, as required by law.

2). If changes ordered in design, workmanship or materials are of such a nature as to increase or decrease the cost of any part of the work, the price fixed in the Contract shall be increased or decreased by such amount as represents the reasonable and proper allowance for the increase or decrease in the cost of the work in accordance with the provisions of this Article, and any other applicable terms of the Contract, including, but not limited to, the ESCO's schedule of values and the price for allowances, if any. Except as provided by law, the total cost of all Modifications shall not exceed ten (10) percent of the original Contract price.

3). In the case of a disputed work item, the District may direct the ESCO to perform the disputed work at no additional cost to the District on the grounds that the work is adequately indicated in the Contract Documents, and therefore already included in the Contract price. If the ESCO maintains that the disputed work represents a modification to the Contract, ESCO

may submit a claim in accordance with Article 50, Resolution of Construction Claims. Notwithstanding any dispute regarding the requirements of the Contract Documents, ESCO shall promptly and fully comply with the District's directive. ESCO's failure to do so shall be deemed a material breach of this Contract, and in addition to all other remedies, District may, at its sole discretion, hire another ESCO and/or use its own forces to complete the disputed work at ESCO's sole expense, and may deduct the cost of such work from the Contract price.

b. Cost Breakdown

When the Modification is proposed, the ESCO shall furnish a complete breakdown of actual costs of both credits and extras, itemizing materials, labor, taxes, overhead and profit. Subcontract work shall be so indicated. All costs must be fully documented. The following limitations shall apply:

1). Limitations Where Contract Price Changes are Involved:

(a) Overhead and Profit for the ESCO. The ESCO's overhead and profit on the cost of subcontracts shall be a sum not exceeding ten percent (10%) of such costs. The ESCO's overhead and profit on the costs of work performed by the ESCO shall be a sum not exceeding fifteen percent (15%) of such costs. Overhead and profit shall not be applied to the cost of taxes and insurance by ESCO or Subcontractors or to credits. No processing or similar fees may be charged by the ESCO in connection with the Modification.

(b) Bond Premiums. The actual rate of bond premiums as paid on the total cost (including taxes) will be allowed, but with no markup for profit and overhead.

(c) Taxes. State and city sales taxes should be indicated. Federal excise tax shall not be included. (District will issue an exemption on request.)

2). Change Order Certification:

All change orders and requests for proposed change orders shall be deemed to include the following certification by the ESCO:

"The undersigned ESCO approves the foregoing as to the changes in work, if any, and as to the Contract price specified for each item and as to the extension of time allowed, if any, for completion of the Project as stated herein, and agrees to furnish all labor, materials, and service and to perform all work necessary to complete any additional work specified for the consideration stated herein. Submission of claims which have no basis in fact or which ESCO knows are false are made at the sole risk of the ESCO and may be a violation of the False Claims Act, as set forth in Government Code §§12650 et seq. It is understood that the changes to the Contract Documents set forth herein shall only be effective upon approval by the Governing Board of the District.

"It is expressly understood that the value of the extra work or changes expressly includes any and all of the ESCO's costs and expenses, both direct and indirect, resulting from additional time required on the Project or resulting from delay to the Project. Any costs, expenses, damages, or time extensions not included herein are deemed waived."

c. Unit Prices, Schedule of Values, or Allowances:

Where Unit Prices, a Schedule of Values, and/or Allowances are required by the Contract Documents, that pricing shall govern in computing any additions to or deductions from the Contract price on account of any added or omitted work. Unit Prices listed in the original proposal include all costs and no addition of any description will be allowed.

d. Time and Materials:

If it is impractical, because of the nature of the work, or for any other reason, to fix an increase in price in advance, the Change Order may fix a maximum price which shall not under any circumstances be exceeded, and subject to such limitation, such alteration, modification or extra shall be paid for at the actual necessary cost as determined by the sum of the following items (1) to (5) inclusive:

1). Labor, including premium on compensation insurance and charge for Social Security taxes, and other taxes pertaining to labor.

2). Material, including sales taxes and other taxes pertaining to materials.

3). Plant and equipment rental, to be agreed upon in writing before the work is begun. No charge for the cost of repairs to plant or equipment will be allowed.

4). Overhead and profit computed at fifteen percent (15%) of the total of Items (1) to (3) inclusive.

5). The proportionate cost of premiums on bonds computed at one and one-half percent (1-1/2%) of the total of items (1) to (4) inclusive.

If the Time and Materials work is done by a Subcontractor, the amount shall be determined as set forth above under items (1) to (5) inclusive. The ESCO's overhead and profit on the costs of subcontracts (exclusive of taxes and insurance) shall not exceed ten percent (10%) of such costs.

The District reserves the right to furnish such materials as it may deem expedient, and no allowance will be made for profit thereon. The above-described methods of determining the payment for work and materials shall not apply to the performance of any work or the furnishing of any material which, in the judgment of the District, may properly be classified under items for which prices are established in the Contract.

e. Oral Modifications:

No oral statements of any person shall in any manner or degree modify or otherwise affect the terms of the Contract.

29. INDEMNITY

ESCO shall defend with counsel acceptable to the District, indemnify and hold harmless to the full extent permitted by law, the District and its Board of Trustees, officers, agents, Project Manager, construction manager, employees and volunteers from and against any and all liability, loss, damage, claims, expenses, fines, judgments and costs (including, without limitation, attorney’s fees and costs and fees of litigation) (collectively, "Liability") of every nature arising out of or in connection with ESCO's performance of the Project or its failure to comply with any of its obligations contained in these Contract Documents, except such Liability caused by the active negligence, sole negligence or willful misconduct of the District. Such indemnification

shall extend to all claims, demands, or liabilities occurring after completion of the project as well as during the progress of the work. Pursuant to Public Contract Code §9201, District shall timely notify ESCO of receipt of any third-party claim relating to this Project.

30. WARRANTY OF TITLE

ESCO warrants that title to all work, materials or equipment included in a request for payment shall pass and transfer to the District whether or not they are installed or incorporated in the Project, free from any claims, liens or encumbrances, when such payment is made to the ESCO. ESCO further warrants that no such work, materials or equipment have been purchased for work under the Contract subject to an agreement by which an interest therein or an encumbrance thereon is retained by the seller or supplier.

31. USE OF COMPLETED PARTS OF THE WORK BEFORE ACCEPTANCE

Whenever the work or any part thereof is in a condition suitable for use, and the best interest of the District requires such use, as determined by the District, the District may take possession of, connect to, open for public use, or use the work or a part thereof. When so used, maintenance and repairs due to ordinary wear and tear or vandalism will be made at District's expense. The use by the District of the work or part thereof as contemplated in this section shall in no case be construed as constituting acceptance of the work or any part thereof, including, but not limited to, the right to assess liquidated damages. Such use shall neither relieve the ESCO of any of ESCO's responsibilities under the Contract nor act as a waiver by the District of any of the conditions thereof. ESCO shall continue to maintain all insurance, including Builder's Risk insurance, on the entire Project, and diligently pursue full completion of the work.

32. GUARANTEE & WARRANTY

a. By signing this Contract, ESCO agrees to the following guarantee and warranty:

We hereby guarantee and warrant our work on the Proposition 39 Energy Project for a period of ten (10) years from the date of filing of the Notice of Completion.

Panels will have a 25-year warranty.

Inverters shall have the maximum extended warranty.

ESCO shall promptly repair or replace to the satisfaction of the District any or all work that appears defective in workmanship, equipment and/or materials for whatever reason, ordinary wear and tear and unusual abuse or neglect excepted, together with any other work which may be damaged or displaced in so doing. ESCO agrees to promptly correct and remedy any failure by the ESCO to conform its work, activities and services to the requirements of the Contract Documents.

ESCO shall provide **post-construction a 10% warranty bond** for any work that may need repair or replacement post-installation for a period of two years from the date of filing the Notice of Completion.

In the event of the ESCO's failure to comply with the above-mentioned obligations within the ten (10) calendar days of notice, or sooner if required by an emergency, ESCO hereby authorizes the District to have the defects or deficiencies repaired, remedied, corrected and made good at ESCO's expense, and ESCO shall pay the costs and charges therefore upon demand. The

warranty bond will cover these costs and charges as well for a period of two years from the date of filing the Notice of Completion.

33. PROTECTION OF WORK AND PROPERTY

a. The ESCO shall be responsible for each operation and all work on the Project, both permanent and temporary. The ESCO shall protect the work and materials from damage due to negligence, the action of the elements, the carelessness of third parties, vandalism, or any other cause whatsoever, until the final completion and acceptance of the Project. Should improper work by the ESCO be covered by another ESCO and damage or defects result, the whole work affected shall be made good by the ESCO to the satisfaction of the Project Manager and District without expense to the District. The ESCO shall take reasonable care to avoid damage to existing facilities or utilities, whether on the Project or adjacent to it, and ESCO shall be liable for any damage thereto or interruption of service due to ESCO's operations. If the ESCO encounters any facilities or utilities not shown on the drawings or not reasonably inferable there from, ESCO shall promptly notify the Project Manager about them, and shall do no further work which may cause damage to same. If it is determined that some action needs to be taken regarding facilities not shown, the ESCO will be given directives on what action to take, and any additional cost to the ESCO incurred thereby will be handled by Change Order.

b. The property limits of the area of the Project are indicated on the drawings. Except for work specifically shown or noted, ESCO shall confine ESCO's operations within the indicated property limits. The ESCO shall provide, install, and maintain all shoring, bracing and underpinning necessary to support adjacent property, streets, buildings and structures, that may be affected by building operations for this work; shall serve or cause to be served all legal notices to adjoining property owners that may be necessary for their protection; and shall protect from damage all adjacent buildings, fences, landscaping, and repair or replace any such property damaged in the course of work under the Contract.

34. USE OF ROADWAYS AND WALKWAYS

The ESCO shall not unnecessarily interfere with use of any roadway, walkway or other facility for vehicular or pedestrian traffic, by any party entitled to use it. Wherever such interference becomes necessary for the proper and convenient performance of the work and no satisfactory detour route exists, the ESCO shall, before beginning the interference, provide a satisfactory detour, temporary bridge, or other proper facility for traffic to pass around or over the interference and shall maintain it in satisfactory condition as long as the interference continues, all without extra payment unless otherwise expressly stipulated in the Contract Documents.

35. MATERIALS

a. Unless explicitly stated otherwise, all specified equipment and material comprising the work of this Contract, as being provided or furnished or installed, shall imply the inclusion of all components, hardware and accessories, required for complete installation and satisfactory operation as intended by the manufacturer. Wherever the method of installation of any material is not explicitly specified, the installation shall be as recommended by manufacturer.

b. Wherever in the Contract Documents it is provided that the ESCO shall furnish materials or equipment for which no detailed specifications are set forth, such materials or equipment shall be new and of the best grade for the purpose for which they will be used when incorporated in the work. Materials specified by reference to a number or symbol of a specific standard, such as A.S.M., Federal Specification, State Standard, Trade Association, or similar standards, shall

comply with requirements in the latest revision thereof and any amendment or supplement in effect on the date of the Request for Proposals.

c. None of the materials to be provided furnished or installed on this project shall contain asbestos or any other "hazardous substance" as that term is defined by federal or state law.

36. SUBSTITUTIONS

a. Wherever in the drawings or Specifications a material or product is called for by trade or brand names or manufacturer and model number, alternative items of equal quality and purpose may be proposed for use by the ESCO. The burden of proof of equality is on the ESCO, and ESCO shall furnish all information and supplies necessary for the Project Manager to make a thorough evaluation of the proposed substitution. The Project Manager's decision about the equality of the proposed substitution is final, and if the proposed substitution is not approved, the ESCO shall install the item called for. Proposed substitutions and any changes in adjacent work caused by them shall be made by the ESCO at no additional cost to the District.

b. Proposed substitutions shall be submitted sufficiently before actual need to allow time for thorough evaluation. Substitutions shall not be proposed for the reason that submittals were not made early enough to avoid delay. Project Manager's review of substitutions shall not relieve the ESCO from complying with the requirements of the drawings and Specifications. Requests for substitution will be considered if received within 30 days after receipt of the Notice of Award. Requests received more than 30 days after receipt of the Notice of Award may be considered or rejected at the discretion of the Project Manager. Contractor shall identify the product, or the fabrication or installation method to be replaced in the request. Contractor shall also provide complete documentation showing compliance with the requirements for substitutions, as set forth herein, and the following information, as appropriate:

- Product Data, including Drawings and descriptions of products, fabrication and installation procedures.
- Samples, where applicable or requested.
- A detailed comparison on the same page of significant qualities of the proposed substitution with those of the Work specified. Significant qualities may include elements such as size, weight, durability, performance and visual effect. All differences in products shall be noted.
- A statement indicating the substitution's effect on the Contractor's Construction Schedule compared to the schedule without approval of the substitution. Indicate the effect of the proposed substitution on overall Contract Time.
- Certification by the Contractor that the substitution proposed complies in every significant respect to that required by the Contract Documents, and that it shall:
    - Be equal to or better in every significant respect to specified material or product, and shall perform adequately in the intended application.
    - Provide the same or greater warranty for the substitution as for the specified product.
    - Provide the same required fire rating for the substitution as for the specified product.

- Coordinate installation and make changes to other Work, which may be required for the Work to be complete with no additional costs to Owner.

c. In the event ESCO makes substitutions in materials, equipment, or designs, with or without the District's approval, other than those authorized herein, the ESCO shall then assume full responsibility for the effects of such substitutions on the entire project, including the design, and shall reimburse the District for any charges resulting from such substitutions, including any charges for modifications in the work of other trades, and including any charges for additional design and review, plus reasonable and customary mark-ups.

37. TESTING

a. Materials, equipment, or other work requiring tests may be specified in the Contract Documents, and they shall be adequately identified and delivered to the site in ample time before intended use to allow for testing. If such materials, equipment or other work should be covered without required testing and approval, they shall be uncovered at the ESCO's expense, including any repairs or replacement resulting there from. The ESCO shall notify the District and Project Manager when and where such materials, equipment or other work are ready for testing, and ESCO shall bear the cost of making them available for testing. The ESCO shall notify the District and Project Manager sufficiently before the need for testing so as to cause no delay in the work and, in any case, at least forty-eight (48) hours prior to the need for testing.

b. The cost of initial tests called for will be paid by the District and will be performed by independent testing consultants retained by the District. All other tests and inspections specified or otherwise required to substantiate compliance with specified requirements for quality of material or performance of operation shall be paid for by the ESCO. If retesting or additional testing is necessary because of substandard initial test results, the costs thereof shall be paid by the ESCO, including any repairs or replacement resulting there from.

38. INSPECTION

a. All materials, equipment and workmanship used in the work of the Project shall be subject to inspection or testing at all times and locations during construction and/or manufacture. The District's and Project Manager's authorized representatives and representatives of other agencies having authority over the work shall have access to the work for the above purposes at all reasonable times and locations. Any material or work found to be unsatisfactory or not according to the Contract Documents shall be replaced with the correct material or work and the defective items promptly removed, all at the ESCO's expense, when directed to do so by any of the above-named persons having authority over the work. The cost of review time and analysis by the Project Manager or other District consultants necessitated by incomplete or defective work by the ESCO shall be charged to the ESCO.

b. Inspection and testing by the District or its representatives shall not relieve the ESCO from complying with the requirements of the Contract Documents. The ESCO is responsible for its own quality control.

c. Whenever required by the District or Project Manager, the ESCO shall furnish all tools, labor and materials necessary to make an examination of work in place by uncovering the same. Should such work be found unsatisfactory, the cost of examination and reconstruction shall be paid by the ESCO. Should such work be found satisfactory, the cost of examination and reconstruction of the work shall be paid by Change Order unless the ESCO improperly covered the work before it could be inspected or tested. If the ESCO considers it necessary or desirable

to work on Saturday, Sunday or a holiday, ESCO shall seek written approval from the District at least forty-eight (48) hours before the commencement of such work.

39. CLEANUP

a. The ESCO shall maintain the premises and area of the work shall be in a reasonably clean condition. No burning of rubbish on-site shall be allowed. The ESCO shall control dust on the site by sprinkling at whatever intervals are necessary to keep it laid down, and shall take measures to prevent dust and debris from being accidentally transported outside the area of the work.

b. Final cleaning, such as sweeping, dusting, vacuuming, dry and wet mopping, polishing, sealing, waxing and other finish operations normally required on newly installed work shall be taken to indicate the finished conditions of the various new and existing surfaces to restore area to condition at the time of acceptance. Prior to the time of acceptance, all marks, stains, fingerprints, dust, dirt, splattered paint and blemishes resulting from the various operations shall be removed throughout the Project. Stair treads and risers shall be wet-mopped. Glass shall be left clean and polished both inside and outside. Plumbing fixtures and light fixtures shall be washed clean. Hardware and other unpainted metals shall be cleaned and all building papers and other temporary protections shall be removed throughout the building, or portion of the building where ESCO was involved, all to the satisfaction of the Project Manager and District. The exterior of the buildings, playfields, exterior improvements, planting spaces, and other work areas shall be similarly clean and in good order.

40. CONSRUCTION WASTE MANAGEMENT

a. Scope

1). This Article includes requirements for the diversion by the ESCO of construction and demolition debris from landfills. The ESCO shall develop and implement a Waste Management Plan as specified herein. The ESCO shall take a pro-active, responsible role in the management of construction and demolition waste and require all Subcontractors, vendors, and suppliers to participate in the effort.

2). The District has established that this Project shall generate the least amount of waste practicable and that processes shall be utilized that ensure the generation of as little waste as possible due to over-packaging, error, poor planning, breakage, mishandling, contamination or other factors.

3). As much of the waste materials as economically feasible shall be reused, salvaged or recycled. Waste disposal in landfills shall be minimized.

4). The ESCO is encouraged to use waste hauling companies that separate recyclable materials. The ESCO shall work with its waste haulers in providing other recycling methods as appropriate.

5). The ESCO is responsible for implementation of any special programs involving rebates or similar incentives related to the recycling of waste. Revenues or other savings obtained for salvage or recycling accrue to the ESCO.

b. References

1). “Builders' Guide to Reuse and Recycling, A Directory for Construction and Demolition Materials."

2). “Construction Site Recycling, a Guide for Building ESCOs ". For a copy of the guide call 1-888-442-2666 or go to www.recycleworks.org.

3). “Where to Recycle Construction and Demolition Debris." For a copy of the guide call 1-888-442-2666 or go to www.recycleworks.org.

c. Definitions

1). General: Construction and demolition waste includes products of demolition or removal, excess or unusable construction materials, packaging materials for construction products, and other materials generated during the construction process but not incorporated into the work.

2). Divert" means to use material for any lawful purpose other than disposal in a landfill or transfer facility for disposal

3). “Recycling Service" means an off-site service that provides processing of material and diversion from a landfill.

4). “Hauler" means the entity that transports construction and demolition debris to either a landfill or a recycling service.

d. Compliance with Regulatory Requirements

1). The ESCO shall perform all handling, storage, transportation and disposal of construction debris in compliance with all applicable Federal, State, regional, and local statutes, laws, regulations, rules, ordinance, codes and standards.

2). Nothing stated on the drawings, in this Article 40 or in any other provision of the Contract Documents shall be construed as allowing work that is not in strict compliance with all applicable Federal, State, regional, and local statutes, laws, regulations, rules, ordinances, codes and standards.

e. Performance Requirement

1). The ESCO shall divert a minimum of 50 percent (50%) of the total Project construction and demolition waste from landfills.

f. Quality Control

1). General:

i) The ESCO shall not permit materials designated for diversion to become contaminated or to contaminate the site or surrounding areas.

2). Training and Coordination:

i) The ESCO shall designate an on-site party [or parties] who will be responsible for instructing workers and Subcontractors, and overseeing and documenting the results of the Waste Management Plan for the Project.

ii) The ESCO shall furnish copies of the Waste Management Plan to all on-site supervisors, each Subcontractor, and the District’s representative.

iii) The ESCO shall include construction waste management as an item on the agenda of all progress meetings.

3). The Waste Management Plan:

i) The ESCO shall prepare a Waste Management Plan for diverting the specified percentage of construction debris from landfills, including written and graphic information indicating how the waste will be diverted.

ii) Include in the plan both on-site recycling of construction debris and off-site diversion from landfills.

iii) Identify the means and methods for collecting and separating each type of debris deemed reusable or recyclable.

iv) List the off-site recycling service and hauler of each designated debris item who has agreed to accept and divert that item from the landfill in the proposed quantities anticipated. List the service and hauler company name, address, telephone number, and persons contacted.

v) List the name of individuals on the ESCO's staff responsible for waste prevention and management.

vi) List the actions that will be taken to reduce solid waste generation, including coordination with Subcontractors to ensure awareness and participation.
vii) Describe the specific approaches to be used in recycling/reuse of the various materials generated, including the areas on site and equipment to be used for processing, sorting, and temporary storage of wastes.
viii) Characterize the waste to be generated, including estimated types and quantities. Name the landfills and/or incinerator to be used.
ix) List the specific waste materials that will be salvaged for resale, salvaged and reused on the Project, salvaged and stored for reuse on a future project, or recycled. Recycling facilities that will be used shall be identified by name, location, and phone number.
x) Identify the materials that cannot be recycled or reused with an explanation or justification, to be approved by the Project Manager.

The ESCO shall submit the Waste Management Plan to the Project Manager within 10 calendar days after receipt of the Notice to Proceed, or prior to any waste removal, whichever occurs first. The ESCO shall promptly revise and resubmit the Plan as required by the Project Manager. Review of the ESCO's Waste Management Plan will not relieve the ESCO of responsibility for compliance with applicable environmental regulations or meeting Project diversion requirements.

g. Plan Implementation
1). The ESCO shall implement the approved Waste Management Plan.
2). The ESCO shall maintain a log of each load and of each category of waste that is diverted from the landfill. The ESCO shall separately log the debris sent to a Class III landfill and materials sent to recycling facilities.
3). The ESCO shall include in the log the type of load, load weight, name of the hauling service, recycling service or landfill, and the date accepted by the recycling service or by the landfill.
4). The ESCO shall retain and make available all weight tickets and copies of receipts and invoices relating to the implementation of the Plan.
5). The District reserves the right to audit the log at any time.

h. Material Handling
1). Designate a specific area or areas on site to facilitate the separation of materials for potential reuse, salvage, recycling, and return. Clearly mark bins for each category of waste.
2). Keep waste bins and pile areas neat and clean. Do not contaminate non-recyclable waste with materials designated for reuse or recycling.

i. ESCO's Responsibilities
1). Provide on-site instruction of the appropriate separation, handling, recycling, salvage, reuse, and return methods to be used by all parties at the appropriate stages of the Project.
2). Separate, store, protect, and handle at the site identified recyclable and salvageable waste products in a manner that maximizes recyclability and salvagability of identified materials. Provide the necessary containers, bins and storage areas to facilitate effective waste management. Provide barriers and enclosures around recyclable material storage areas which are nonhazardous and recyclable or reusable and which shall be located away from construction traffic. Provide adequate space for pick-up and delivery. Use cleaning materials that are nonhazardous and biodegradable.

41. INSTRUCTIONS AND MANUALS

One electronic copy of all maintenance instructions application/installation instructions and service manuals called for in the Specifications shall be provided by the ESCO. These shall be complete as to drawings, details, parts lists, performance data and other information that may be required for the District to easily maintain and service the materials and equipment installed under this Contract. All manufacturers' application/installation instructions shall be given to the Project Manager at least ten (10) days prior to first material application or installation of the item. The maintenance instructions and manuals, along with any specified guarantees, shall be delivered to the Project Manager for review prior to submitting to District, and the ESCO or appropriate Subcontractors shall instruct District's personnel in the operation and maintenance of the equipment prior to final acceptance of the Project. All documentation must be received by Project Manager within thirty (30) calendar days after District's notice of completion.

42. AS-BUILT DRAWINGS

The ESCO and all Subcontractors shall maintain on the work site a separate complete set of contract drawings which will be used solely for the purpose of recording changes made in any portion of the work during the course of construction, regardless of the reason for the change. As changes occur, there will be included or marked on this record set on a daily basis if necessary to keep them up to date at all times. Actual locations to scale shall be identified on the drawings for all runs of mechanical and electrical work, including all site utilities, installed underground, in walls, floors, and furred spaces, or otherwise concealed. Deviations from the drawings shall be shown in detail. All main runs, whether piping, conduit, duct work, drain lines, etc., shall be located in addition by dimension and elevation. Progress payments may be delayed or withheld until such time as the record set is brought up to date to the satisfaction of the Project Manager. The ESCO shall verify that all changes in the work are included in the "AS-BUILT" drawings and deliver the complete set thereof to the Project Manager for review and approval within thirty (30) calendar days after District's notice of completion. District's acceptance and approval of the "AS-BUILT" drawings are a necessary condition precedent to the release of the final retention.

43. SUBSTITUTION OF SECURITIES

a. Pursuant to Public Contract Code section 22300, ESCO may request in writing that it be allowed at its own expense to substitute securities for moneys withheld by District to ensure performance under this Contract. Only securities listed in Government Code Section 16430 and bank or savings and loan certificates of deposit, interest-bearing demand deposit accounts standby letters of credit, or any other security mutually agreed to by ESCO and District shall qualify under this Article. Securities equivalent to the amount withheld shall be deposited with the District or with a state or federally chartered bank in California as the escrow agent. Upon satisfactory completion of the Contract and on written authorization by the District, the securities shall be returned to ESCO. ESCO shall be the beneficial owner of the securities and shall receive any interest thereon. The ESCO may alternatively request District to make payment of retentions earned directly to the escrow agent at the expense of the ESCO.

b. At the expense of the ESCO, the ESCO may direct the investment of the payments into securities and the ESCO shall receive the interest earned on the investments upon the same terms provided for above for securities deposited by ESCO. Upon satisfactory completion of the contract, ESCO shall receive from the escrow agent all securities, interest, and payments received by the escrow agent from the District. The ESCO shall pay to each Subcontractor, not

later than 20 days of receipt of payment, the respective amount of interest earned, net of costs attributed to retention withheld from each Subcontractor, on the amount of retention.

c. Any escrow agreement entered into pursuant to this Article shall comply with Public Contract Code section 22300 and shall be subject to approval by District's counsel.

44. NO DISCRIMINATION

It is the policy of the District that, in connection with all work performed under this public works contract, there shall be no discrimination against any prospective or active employee or any other person engaged in the work because of actual or perceived race, color, ancestry, national origin, ethnic group identification, religion, sex, gender, sexual orientation, age, physical or mental disability, or marital status. The ESCO agrees to comply with applicable Federal and California laws including, but not limited to, the California Fair Employment Practice Act, beginning with Government Code §12900, Government Code §11135, and Labor Code §§ 1735, 1777.5, 1777.6 and 3077.5. In addition, the ESCO agrees to require like compliance by all Subcontractors and suppliers.

45. LABOR STANDARDS

a. Work Hours:

In accordance with Labor Code section 1810, eight (8) hours of labor shall constitute a legal day's work under this Contract. ESCO and any Subcontractor shall pay workers overtime pay as required by Labor Code section 1815. The ESCO shall pay each worker, laborer, mechanic or persons performing work under this Contract at a rate not less than the prevailing wage for each craft or classification covering the work actually performed.

b. Penalty:

ESCO shall forfeit to District as a penalty the sum of twenty-five dollars ($25.00) for each worker employed in the execution of this Contract by ESCO or any Subcontractor for each calendar day during which the worker is required or permitted to work more than eight (8) hours in any one (1) calendar day or more than forty (40) hours per calendar week in violation of Article 3, Division 2, Part 7, Chapter 1 of the California Labor Code.

c. Employment of Apprentices:

ESCO shall comply with Labor Code §§1773.3, 1777.5 and 1777.6, and 3077 et. seq., each of which is incorporated by reference into this Contract. These sections require that ESCOs and Subcontractors employ apprentices in apprenticeable occupations in a ratio of not less than one (1) hour of apprentice work for every five (5) hours of labor performed by a journeyman, unless an exception is granted and that ESCOs and Subcontractors shall not discriminate against otherwise qualified employees as apprentices on any public works solely on the ground of actual or perceived race, religion, color, national origin, ethnic group identification, sex, gender, sexual orientation, age, or physical or mental disability. Only apprentices who are in training under written apprenticeship occupations shall be employed. The responsibility for compliance with these provisions for all apprenticeable occupations rests with ESCO.

d. The ESCO shall be knowledgeable of and comply with Labor Code sections 1727, 1773.5, 1775, 1777, 1777.5, 1810, 1813, 1860, including all amendments thereto; each of these sections is incorporated by reference into this Contract.

46. GENERAL RATE OF PER DIEM WAGES

a. On File:

As required by Labor Code section 1773.2, the District has available copies of the general prevailing rate of per diem wages for workers employed on public work as determined by the Director of the Department of Industrial Relations, which shall be available to any interested party on request. ESCO shall post a copy of the document at each job site.

b. Prevailing Wage Rate:

The ESCO and each Subcontractor shall pay each worker performing work under this Contract at a rate not less than the prevailing wage as defined in Labor Code section 1771 and 1774 and Section 16000(a) of Title 8, California Code of Regulations.

c. Penalty:

In accordance with Section 1775 of the Labor Code, the ESCO shall forfeit to the District as penalty, the sum of fifty dollars ($50.00) for each calendar day, or portion thereof, for each worker paid less than the prevailing wage rates, as determined by the Director of the California Department of Industrial Relations, for any work done under this Contract by ESCO or by any Subcontractor. ESCO shall also pay each worker the difference between the stipulated prevailing wages rates and the amount actually paid to such worker.

47. RECORD KEEPING

a. The ESCO agrees to comply with the provisions of Sections 1776 and 1812 of the Labor Code. The ESCO and each Subcontractor shall keep or cause to be kept an accurate record showing the names, addresses, social security numbers, work classifications, straight time and overtime hours worked each day and week of all workers employed by ESCO in connection with the execution of this Contract or any subcontract there under and showing the actual per diem wages paid to each of such workers. These records shall be certified and shall be open at all reasonable hours to the inspection of the District awarding the Contract, its officers and agents, and to the Chief of the Division of Labor Statistics and Law Enforcement of the State Department of Industrial Law Enforcement of the State Department of Industrial Relations, and his or her other deputies and agents.

b. In addition, copies of the above records shall be available as follows:

1). A certified copy of an employee's payroll record shall be made available for inspection or furnished to the employee or his or her authorized representative on request;

2). A certified copy of all payroll records shall be made available for inspection or furnished upon request to the District, the Division of Labor Standards Enforcement, and the Division of Apprenticeship Standards of the Department of Industrial Relations;

3). A certified copy of all payroll records shall be made available upon request by the public for inspection or copies thereof made; provided, however, that a request by the public shall be made through either the District, the Division of Apprenticeship Standards, or the Division of Apprenticeship Standards, or the Division of Labor Standards Enforcement. If the requested payroll records have not been previously provided, the requesting party shall, prior to being provided the records, reimburse the costs of the ESCO, Subcontractors, and the

entity through which the request was made. The public shall not be given access to the records at the principal office of the ESCO.

c. The ESCO shall file a certified copy of the records with the entity requesting the records within ten days after receipt of a written request. Any copy of records made available for inspection as copies and furnished upon request to the public or any public agency by the District, shall be marked or obliterated in such a manner as to prevent disclosure of an individual's name, address, and social security number. The name and address of the ESCO awarded the Contract or performing the Contract shall not be marked or obliterated.

d. The ESCO shall inform the Owner of the location of the records, including the street address, city and county, and shall, within five working days, provide a notice of a change of location and address.

e. In the event of noncompliance with the requirements of this section, the ESCO shall have ten days in which to comply subsequent to receipt of written notice specifying in what respects the ESCO must comply with this section. Should noncompliance still be evident after the ten day period, the ESCO shall, as a penalty to the District, forfeit one hundred dollars ($100.00) for each calendar day, or portion thereof, for each worker, until strict compliance is effectuated. Upon the request of the Division of Apprenticeship Standards or the Division of Labor Standards Enforcement, these penalties shall be withheld from progress payments then due.

f. Responsibility for compliance with this provision shall be with the ESCO.

48. <u>PROJECT COMPLETION</u>

a. When all of the work to be performed under this Contract is has been fully completed, the ESCO shall notify the Project Manager and District, in writing, setting a date for inspection. The ESCO and Subcontractor representatives shall attend the inspection. As a result of this inspection, the Project Manager will prepare a list of items ("punch list") that are incomplete or not installed according to the Contract Documents. Failure to include items on this list does not relieve the ESCO from fulfilling all requirements of the Contract Documents.

b. The Project Manager will promptly deliver the punch list to the ESCO and it will include a period of time by which the ESCO shall complete all items listed thereon. On completion of all items on the punch list, verified by a final inspection, and all other Contract requirements, so that Final Completion has been achieved to the District's satisfaction, the District will file a Notice of Completion with the County Recorder. Payment of retention from the Contract, less any sums withheld pursuant to the terms of this Contract or applicable law, shall not be made sooner than thirty-five (35) calendar days after the date of filing of Notice of Completion.

c. District reserves the right to occupy buildings and/or portions of the site at any time before Completion, and occupancy shall not constitute final acceptance of any part of the Work covered by the Contract Documents, nor shall such occupancy extend the date specified for completion of the Work. Beneficial occupancy of building(s) does not commence any warranty period or entitle Contractor to any additional compensation due to such occupancy, or affect in any way or amount Contractor's obligation to pay liquidated damages for failure to complete the Project on time.

49. TRENCHING OR OTHER EXCAVATIONS

a. Excavations or Trenches Deeper than Four Feet:

If the project involves digging trenches or other excavations that extend deeper than four feet, the following provisions shall be a part of this Contract:

1). The ESCO shall promptly, and before the following conditions are disturbed, provide written notice to the District if the ESCO finds any of the following conditions:

(a) Material that the ESCO believes may be a hazardous waste, as defined in Section 25117 of the Health and Safety Code, which is required to be removed to a Class I, Class II, or Class III disposal site in accordance with the provisions of existing law.

(b) Subsurface or latent physical conditions at the site which are different from those indicated or expected.

(c) Unknown physical conditions at the site of any unusual nature or which are materially different from those ordinarily encountered and generally recognized as inherent in work which the ESCO generally performs.

2). In the event that the ESCO notifies the District that ESCO has found any of the conditions specified in subparagraphs (a), (b) or (c), above, the District shall promptly investigate the condition(s). If the District finds that the conditions are materially different or that a hazardous waste is present at the site which will affect the ESCO's cost of, or the time required for, performance of the Contract, the District shall issue a change order in accordance with the procedures set forth in this Contract.

3). In the event that a dispute arises between the District and the ESCO regarding any of the matters specified in Paragraph (2), above, the ESCO shall proceed with all work to be performed under the Contract and the ESCO shall not be excused from completing the Project as provided in the Contract. In performing the work pursuant to this Paragraph, the ESCO retains all rights provided by Article 50 which pertains to the resolution of disputes between the contracting parties.

b. Regional Notification Center:

The ESCO, except in an emergency, shall contact the appropriate regional notification center at least two (2) days prior to commencing any excavation if the excavation will be conducted in an area that is known, or reasonably should be known, to contain subsurface installations other than the underground facilities owned or operated by the District, and obtain an inquiry identification number from that notification center. No excavation shall be commenced and/or carried out by the ESCO unless an inquiry identification number has been assigned to the ESCO or any Subcontractor and the ESCO has given the District the identification number. Any damages or delays arising from ESCO's failure to make appropriate notification shall be at the sole risk and expense of the ESCO and shall not be considered for an extension of the Contract time.

c. Existing Utility Lines:

1). Pursuant to Government Code section 4215, the District assumes the responsibility for removal, relocation, and protection of main or trunk utility lines and facilities located on the construction site at the time of commencement of construction under this contract with respect to any such utility facilities that are not identified in the plans and Specifications.

ESCO shall not be assessed for liquidated damages for delay in completion of the Project caused by the failure of the District or the owner of a utility to provide for removal or relocation of such utility facilities.

2). Locations of existing utilities provided by the District shall not be considered exact, but approximate within reasonable margin and shall not relieve ESCO of responsibilities to exercise reasonable care nor costs of repair due to ESCO's failure to do so. The District shall compensate ESCO for the costs of locating and repairing damage not due to the failure of ESCO to exercise reasonable care, and removing or relocating such utility facilities not indicated in the plans and Specifications with reasonable accuracy.

3). No provision herein shall be construed to preclude assessment against ESCO for any other delays in completion of the project. Nothing in this Section shall be deemed to require the District to indicate the presence of existing service laterals, appurtenances, or other utility lines, with the exception of main or trunk lines, whenever the presence of such utilities on the site of the construction Project can be inferred from the presence of other visible facilities, such as buildings, meter and junction boxes, on or adjacent to the site of the construction.

4). If ESCO, while performing work under this Contract, discovers utility facilities not identified by the District in the project plans and Specifications, ESCO shall immediately notify the District and the utility in writing. The cost of repair for damage to above-mentioned visible facilities without prior written notification to the District shall be borne by the ESCO.

d. Prompt Notification:

ESCO understands, acknowledges and agrees that the purpose for prompt notification to the District pursuant to these provisions is to allow the District to investigate the condition(s) so that the District shall have the opportunity to decide how the District desires to proceed as a result of the conditions. Accordingly, failure of ESCO to promptly notify the District in writing, pursuant to these provisions, shall constitute ESCO's waiver of any claim for damages incurred as a result of the conditions.

e. Trenches Five Feet and Deeper:

Pursuant to Labor Code section 6705, if the contract price exceeds $25,000 and involves the excavation of any trench or trenches five (5) feet or more in depth, the ESCO shall, in advance of excavation, promptly submit to the District and/or a registered civil or structural engineer employed by the District or Project Manager, a detailed plan showing the design of shoring for protection from the hazard of caving ground during the excavation of such trench or trenches.

50. RESOLUTION OF CONSTRUCTION CLAIMS

a. Public work claims of $375,000 or less between the ESCO and the District are subject to the provisions of Article 1.5 (commencing with §20104) of Chapter 1 of Part 2 of the Public Contract Code ("Article 1.5 claim"). For purposes of Article 1.5, "public work" has the same meaning as set forth in §§3100 and 3106 of the Civil Code; "claims" means a separate demand by ESCO for a time extension or payment of money or damages arising from work done by or on behalf of ESCO pursuant to the Contract and payment of which is not otherwise expressly provided for or the claimant is not otherwise entitled to or the amount of the payment which is disputed by the District.

b. All claims shall be submitted on or before the date of the Final Payment and shall include all documents necessary to substantiate the claim. District shall respond in writing within 45 days of receipt of claim if the claim is less than or equal to $50,000 ("$50,000 claim") or within 60 days if the claim is over $50,000 but less than or equal to $375,000 ("50,000 - $375,000 claim"). In either case, District may request in writing within 30 days of receipt of claim any additional documentation supporting the claim or relating to any defenses to the claim which the District may have against the ESCO. Any additional information shall be requested and provided upon mutual agreement of the District and the ESCO. District's written response to the claim shall be submitted to ESCO within 15 days after receipt of the further documentation for $50,000 claims or within 30 days after receipt of the further documentation for $50,000 - $375,000 claims or within a period of time no greater than that taken by the ESCO in producing the additional information, whichever is greater.

c. Within 15 days of receipt of the District's response, if ESCO disputes the District's written response, or within 15 days of the District's failure to respond within the time prescribed, the ESCO shall provide written notification to District demanding an informal conference to meet and confer ("conference") to be scheduled by District within 30 days. Following the conference, if any claim or portion remains in dispute, the ESCO may file a claim as provided in Chapter 1 (commencing with §900) and Chapter 2 (commencing with §910) of Part 3 of Division 3.6 of Title 1 of the Government Code. For purposes of those provisions, the period of time within which a claim must be filed is tolled from the time the claimant submits a written claim pursuant to this section until the time that claim is denied as a result of the conference process, including any period of time utilized by the meet and confer process.

d. Pursuant to Public Contract Code §20104.2(f), this section does not apply to tort claims and does not change the period for filing claims or actions specified by Chapter 1 (commencing with §900) and Chapter 2 (commencing with §910) of Part 3 of Division 3.6 of Title 1 of the Government Code.

e. If a civil action is filed, within 60 days, but no earlier than 30 days, following the filing of responsive pleadings, the court shall submit the matter to nonbinding mediation unless waived by mutual stipulation of both parties. The mediation process shall provide that both parties select a disinterested third person mediator within 15 days, shall be commenced within 30 days of the submittal, and shall be concluded within 15 days of the commencement of the mediation unless time is extended upon a good cause showing to the court or by stipulation of the parties. If the parties fail to select a mediator within the 15-day period, any party may petition the court to appoint the mediator.

f. If the matter remains in dispute, the case shall be submitted to judicial arbitration as set forth in Public Contract Code §§20104.4 (b)(1) through (b)(3).

g. For any claim in excess of $375,000, the ESCO and the District shall follow the same process as for an Article 1.5 claim. The District will forward a response within 60 days of submittal of any such claim. Judicial arbitration is not required for claims in excess of $375,000. Claims shall also be processed consistent with Public Contract Code section 9204, which provides processing timelines and procedures, and requires that undisputed claims be promptly paid in accordance with this code provision.

h. In addition, for all unresolved claims that the ESCO wishes to pursue, the ESCO shall file a timely claim pursuant to the Government Claims Act and shall otherwise comply with the procedures set forth in that Act prior to commencing any litigation against the District. The

accrual date for any such claim is the date the dispute or controversy first arose regarding the issues raised in the claim.

i. "The date of Final Payment," as used in this Article 50, means the date the public entity is required to release retention proceeds in accordance with Public Contract Code §7107 regardless of whether any payment is made to the ESCO at that time.

j. The claims required by this Article are jurisdictional and conditions precedent to the commencement of any further legal proceedings. Strict compliance with all filing deadlines is mandatory.

51. DISABLED VETERANS PARTICIPATION GOALS (Applies to K-12 districts only.)

In accordance with Education Code §17076.11, this District has a participation goal for disabled veteran business enterprises ("DVBE") of at least 3 percent (3%) per year of the overall dollar amount of funds allocated to the District by the State Allocation Board pursuant to the Leroy F. Greene School Facilities Act of 1998 for construction or modernization and expended each year by the District. Prior to, and as a condition precedent for final payment under any contract for such project, the ESCO shall provide appropriate documentation to the District identifying the amount paid to DBVE in conjunction with the Contract, so that the District can assess its success at meeting this goal.

52. RETENTION OF DVBE RECORDS (Applies to K-12 districts only.)

The ESCO agrees that, for all contracts subject to DVBE participation goals, the State and the District have the right to review, obtain and copy all records pertaining to performance of the contract in accordance with DVBE requirements. The ESCO agrees to provide the State or the District with any relevant information requested and shall permit the State or District access to its premises upon reasonable notice for purposes of interviewing employees and inspecting records. The ESCO agrees to maintain such records for a period of three years after final payment under the Contract.

53. FINGERPRINTING (Applies to K-12 districts only.)

District Determination of Fingerprinting Requirement Application

The District has considered the totality of the circumstances concerning the Project and has determined that the ESCO and ESCO's employee (which includes **Subcontractor employees):**

____ are subject to the requirements of Education Code **§**45125.2 and Paragraph (a) below, is applicable.

_X_ are not subject to the requirements of Education Code **§**45125.2**,** and Paragraph (b) below, is applicable.

a. Contracts for Construction, Reconstruction, Rehabilitation or Repair of a School Facility Involving More than Limited Contact with Students (§45125.2)

By execution of the Contract, the ESCO acknowledges that ESCO is entering into a contract for the construction, reconstruction, rehabilitation, or repair of a school facility where the ESCO and/or ESCO's employees will have more than limited contact with students and the services to be provided do not constitute an emergency or exceptional situation. In accordance with

Education Code §45125.2 the ESCO shall, at ESCO's own expense, (1) install a physical barrier to limit contact with students by ESCO and/or ESCO's employees, and/or (2) provide for the continuous supervision and monitoring of the ESCO and/or ESCO's employees by an employee of the ESCO who has received fingerprint clearance from the California Department of Justice, and/or (3) provide for the surveillance of the ESCO and ESCO's employees by a District employee.

b. Contracts for Construction, Reconstruction, Rehabilitation or Repair of a School Facility Involving Only Limited Contact with Students (§45125.2)

By execution of the Contract, the ESCO acknowledges that ESCO is entering into a contract for the construction, reconstruction, rehabilitation or repair of a school facility involving only limited contact with students. Accordingly, the parties agree that the following conditions apply to any work performed by the ESCO and ESCO's employees on a school site: (1) ESCO and ESCO's employees shall check in with the school office each day immediately upon arriving at the school site; (2) ESCO and ESCO's employees shall inform school office staff of their proposed activities and location at the school site; (3) Once at such location, ESCO and ESCO's employees shall not change locations without contacting the school office; (4) ESCO and ESCO's employees shall not use student restroom facilities; and (5) If ESCO and/or ESCO's employees find themselves alone with a student, ESCO and ESCO's employees shall immediately contact the school office and request that a member of the school staff be assigned to the work location.

54. LABOR COMPLIANCE PROGRAM

If this Contract is for a public works project over $25,000 or for a maintenance project over $15,000, ESCO acknowledges that the project is subject to compliance monitoring and enforcement by the California Department of Industrial Relations in accordance with California Labor Code sections 1725.5 and 1770 *et seq*. All contractors and subcontractors working at the site shall be duly registered with the Department of Industrial Relations at time of bid opening and at all relevant times. Proof of registration shall be provided as to all such contractors prior to the commencement of any work. ESCO shall coordinate with the Architect to ensure that DIR is advised of the award of the construction contract in a timely manner by filing form PWC-100 with DIR within ten days of award of the contract, but no later than the first day in which the ESCO has workers employed upon the project.

55. DRUG-FREE WORKPLACE CERTIFICATION

ESCO certifies all of the following:

a. ESCO is aware of the provisions and requirements of California Government Code §§ 8350 et seq., the Drug Free Workplace Act of 1990.

b. ESCO is authorized to certify, and does certify, that a drug free workplace will be provided by doing all of the following:

1). Publishing a statement notifying all employees that the unlawful manufacture, distribution, dispensation, possession or use of a controlled substance is prohibited in ESCO's workplace and specifying actions which will be taken against employees for a violation of the prohibition;

2). Establishing a drug-free awareness program to inform employees about all of the following:

(i) The dangers of drug abuse in the workplace;

(ii) ESCO's policy of maintaining a drug-free workplace;

(iii) The availability of drug counseling, rehabilitation and employee-assistance programs;

and

(iv) The penalties that may be imposed upon employees for drug abuse violations;

3.) Requiring that each employee engaged in the performance of Work on the Project be given a copy of the statement required by subdivision (a), above, and that as a condition of employment by ESCO in connection with the Work on the Project, the employee agrees to abide by the terms of the statement.

c. ESCO understands that if the District determines that ESCO has either: (a) made a false certification herein, or (b) violated this certification by failing to carry out and to implement the requirements of Government Code §§ 8350 et seq., the Contract is subject to termination, suspension of payments, or both. ESCO further understands that, should ESCO violate the terms of the Drug-Free Workplace Act of 1990, ESCO may be subject to debarment in accordance with the provisions of Government Code §§ 8350, et seq.

56. PROVISIONS REQUIRED BY LAW DEEMED INSERTED

Every provision of law and clause required by law to be inserted in this Contract shall be deemed to be inserted, and this Contract shall be read and enforced as though it were included, and if through mistake or otherwise any provision is not inserted or is not correctly inserted, upon application of either party the Contract shall be amended to make the insertion or correction. All references to statutes and regulations shall include all amendments, replacements, and enactments on the subject which are in effect as of the date of this Contract.

57. GENERAL PROVISIONS

a. Assignment and Successors:

Neither party may transfer or assign its rights or obligations under the Contract Documents, in part or in whole, without the other party's prior written consent. The Contract Documents are binding on the heirs, successors, and permitted assigns of the parties hereto.

b. Third Party Beneficiaries:

There are no intended third party beneficiaries to the Contract.

c. Choice of Law and Venue

The Contract Documents shall be governed by California law, and venue shall be in the Superior Court of the county in which the project is located, and no other place.

d. Severability

If any provision of the Contract Documents is determined to be illegal, invalid, or unenforceable, in part of in whole, the remaining provisions, or portions of the Contract Documents shall remain in full force and effect.

e. Entire Agreement

The Contract Documents constitute the final, complete, and exclusive statement of the terms of the agreement between the parties regarding the subject matter of the Contract Documents and supersedes all prior written or oral understandings or agreements of the parties.

f. Waiver

No waiver of a breach, failure of any condition, or any right or remedy contained in or granted by the provisions of the Contract Documents shall be effective unless it is in writing and signed by the party waiving the breach, failure, right, or remedy. No waiver of any breach, failure, right, or remedy shall be deemed a waiver of any other breach, failure, right, or remedy, whether or not similar, nor shall any waiver constitute a continuing waiver unless the writing so specifies.

g. Headings

The headings in the Contract Documents are included for convenience only and shall neither affect the construction or interpretation of any provision in the Contract Documents nor affect any of the rights or obligations of the parties to the Contract.

--End--

APPENDIX D: PERFORMANCE BOND

WHEREAS, the Governing Board of the Fieldbrook Elementary School District ("District"), at its meeting on _____, 2018, has awarded to _____ ("Principal"), the Contract for performance of the following project ("Project"):

Proposition 39 Solar Photovoltaic Project

WHEREAS, the Principal is required under the terms of the Contract to furnish a bond to the District as obligee ensuring its full and faithful performance of the Contract Documents, which are fully incorporated herein by this reference,

NOW, THEREFORE, we, the Principal and _____, as Surety, hereby guarantee the Principal's full, faithful and complete performance of the Contract Document requirements in the penal sum of _____ dollars ($_____) for the payment of which sum will and truly be made, we bind ourselves, our heirs, executors, administrators and successors, jointly, severally, and firmly by this agreement to perform or have performed all of the work and activities required to complete the Project pursuant to the Contract Documents and to pay to the District all damages the District incurs as a result of the Principal's failure to fully perform in accordance with the Contract Documents.

The condition of the obligation is such that if the Principal, its heirs, executors, administrators, successors or assigns shall in all things abide by, and well and truly keep and perform the covenants, conditions and agreements in the Contract Documents and any amendment thereof made as therein provided, on its or their parts to be kept and performed at the time and in the manner therein specified, and in all respects according to their true intent and meaning, and shall insure and indemnify and save harmless the District, its officers and agents, as therein stipulated, then this obligation shall become null and void. Otherwise, it shall be and remain in full force and effect.

The Surety, for value received, hereby stipulates and agrees that no change, extension of time, alteration or addition to the Contract Documents shall in any way affect its obligations on this bond and it does hereby waive notice of any such change, extension of time, alteration or addition.

Principal and Surety further agree to pay all costs incurred by the District in connection with enforcement of this bond, including, but not limited to the District's reasonable attorney's fees and costs incurred, with or without suit, in addition to any other sum required by this bond. Surety further agrees that death, dissolution, or bankruptcy of the Principal shall not relieve the Surety of its obligations hereunder.

In witness whereof, this instrument has been duly executed by the Principal and Surety this _____ day of _____, 2018.

To be signed by Principal and Surety and acknowledgment and notarial seal to be attached.

_____
PRINCIPAL

By: _____

TITLE _____

_____
SURETY

By: _____

TITLE _____

The above bond is accepted and approved this _____ day of _____, 2018.

By: _____
Authorized District Signature

APPENDIX E: PAYMENT BOND

WHEREAS, the Fieldbrook Elementary School District ("District") and the ESCO, _____ ("Principal") have entered into a contract ("Contract") for the furnishing of all materials, labor, services, equipment, tools, supervision and transportation necessary, convenient and proper for the _____ project ("Project") which Contract dated _____, 2018, and all of the Contract Documents made part thereof are fully incorporated herein by this reference; and

WHEREAS, ESCO/Principal is required by Division 4, Part 6, Title 3, Chapter 5 (commencing at Section 9550) of the California Civil Code to furnish a bond in connection with the contract;

NOW, THEREFORE, we, the ESCO/Principal and _____ as Surety, are held firmly bound unto District in the penal sum of $_____ Dollars ($_____), lawful money of the United States of America for the payment of which sum well and truly to be made, we bind ourselves, our heirs, executors, administrators, successors, and assigns, jointly and severally, firmly by these presents.

THE CONDITION OF THIS OBLIGATION IS SUCH that if the ESCO/Principal, his/her or its heirs, executors, administrators, successors, or assigns, or a Subcontractor, shall fail to pay any person or persons named in Civil Code Section 9100 or fail to pay for any materials or other supplies used in, upon, for, or about the performance of the work contracted to be done, or for any work or labor thereon of any kind, or for amounts due under the Unemployment Insurance Code with respect to work or labor thereon of any kind, or shall fail to deduct, withhold, and pay over to the Employment Development Department any amounts required to be deducted, withheld, and paid over by Section 13020 of the Unemployment Insurance Code with respect to work and labor thereon of any kind, then said Surety will pay for the same, in or to an amount not exceeding the amount set forth above, and in case suit is brought upon this bond Surety will also pay such reasonable attorney's fees as shall be fixed by the court, awarded and taxed as provided in Division 4, Part 6, Title 3, Chapter 5 (commencing at Section 9550) of the California Civil Code.

This bond shall inure to the benefit of any of the persons named in Section 9100 of the California Civil Code so as to give a right of action to such person or their assigns in any suit brought upon this bond. It is further stipulated and agreed that the Surety of this bond shall not be exonerated or released from the obligation of the bond by any change, extension of time for performance, addition, alteration, or modification in, to, or of any contract, plans, specifications, or agreement pertaining or relating to any scheme or work of improvement described above or pertaining or relating to the furnishing of labor, materials, or equipment therefore, nor by any change or modification of any terms of payment or extension of the time for any payment pertaining or relating to any scheme or work of improvement described above, nor by any rescission or attempted rescission of the contract, agreement, or bond, nor by any conditions precedent or subsequent in the bond attempting to limit the right of recovery of claimants otherwise entitled to recover under any such contract or agreement or under the bond, nor by any fraud practiced by any person other than the claimant seeking to recover on the bond, and that this bond be construed most strongly against the Surety and in favor of all persons for whose benefit such bond is given, and under no circumstances shall Surety be released from liability to those for whose benefit such bond has been given, by reason of any breach of contract between the District and original

ESCO or on the part of any obligee named in such bond, but the sole conditions of recovery shall be that claimant is a person described in Section 8400 and 8402 of the California Civil Code and has not been paid the full amount of his/her or its claim and that Surety does hereby waive notice of any such change, extension of time, addition, alteration, or modification.

In witness whereof, this instrument has been duly executed by the Principal and Surety this _____ day of _____, 2018.

To be signed by Principal and Surety and acknowledgment and notarial seal to be attached.

_____
PRINCIPAL

By:
_____

_____
Title

_____
SURETY

By:
_____

_____
Title

The above bond is accepted and approved this _____ day of _____, 2018.

By:_____
Authorized District Signature

APPENDIX F: WARRANTY BOND

KNOW ALL PERSONS BY THESE PRESENTS, that

WHEREAS, the _____("District") and the contractor _____, ("Contractor")-have entered into a Contract ("Contract") for the following project (Project):

Fieldbrook Elementary Proposition 39 Solar PV Project

WHEREAS, Principal is required under the terms of the Agreement to furnish warranty security for the work performed pursuant to the Agreement in the amount of [$_____,] to guarantee replacement and repair of the improvements as described in the Agreement for a period of one year following the date of recordation of the notice of acceptance of the Improvements against any defective work or labor done, or defective materials furnished.

NOW, THEREFORE, we, the Principal, and _____ as Surety, are held and firmly bound unto the District in the penal sum of _____Dollars ($_____) lawful money of the United States, being not less than 10 percent (10%) of the amount payable by the terms of the Contract, for the payment of which sum well and truly to be made we bind ourselves, our heirs, executors, administrators and successors, jointly and severally, firmly by these presents.

The condition of this obligation is such that if Principal shall indemnify the District for all loss that District may sustain by reason of any defective materials or workmanship which become apparent during the period of one year from and after acceptance of the improvements by the School Board of the District, then this obligation shall be null and void; otherwise, this obligation shall remain in full force and effect.

As a part of the obligation secured hereby and in addition to the face amount specified, costs and reasonable expenses and fees shall be included, including reasonable attorneys' fees incurred by the District in successfully enforcing the obligation, all to be taxed as costs and included in any judgment rendered.

Surety's obligations hereunder are independent of the obligations of any other surety for the performance of the Contract, and suit may be brought against Surety and such other sureties, jointly and severally, or against any one or more of them, or against less than all of them without impairing the District's rights against the others.

No right of action shall accrue on this bond to or for the use of any person or corporation other than the District or its successors or assigns.

Surety shall provide the District with thirty (30) days' written notice of Principal's default prior to Surety terminating, suspending or revoking the bond.

The Surety hereby stipulates and agrees that no change, extension of time, alteration or addition to the terms of the Contract or to the work to be performed there under or the Specifications accompanying

the same shall in any way affect its obligation on this bond, and it does hereby waive notice of any such change, extension of time, alteration or addition to the terms of the Contract or to the work or to the Specifications.

IN WITNESS WHEREOF, the above-bound parties have executed this instrument under their seals this _____ day of _____, 2018, the name and corporate seal of each corporate body being hereto affixed, and these presents duly signed by its undersigned representative, pursuant to authority of its governing body.

To be signed by Principal and Surety and acknowledgment and notarial seal to be attached.

_____
PRINCIPAL

By: _____

TITLE _____

_____
SURETY

By: _____

TITLE _____

The above bond is accepted and approved this _____ day of _____, 2018.

By: _____
Authorized District Signature

_____
Print Name & Title

APPENDIX G: TECHNICAL FACILITY PROFILE

The information in this technical facility profile is provided to inform the proposer about the facilities.

Operating Information

- The Fieldbrook Elementary School Thanksgiving Break is November 19-23, 2018 and Winter Break is December 24, 2018-January 4, 2019 – the District requests that the PV system installation occur during school breaks.

Site and Building Information

- Google map
- Refer to Appendix 2: Maintenance Shed Drawings

Screen shot from Google Maps for 4070 Fieldbrook Rd, McKinleyville, CA:

BUILDER/CONTRACTOR RESPONSIBILITIES

Drawing Validity – These drawings, supporting structural calculations and design certification are based on the order documents as of the date of these drawings. These documents describe the material supplied by the manufacturer as of the date of these drawings. Any changes to the order documents after the date on these drawings may void these drawings, supporting structural calculations and design certification. The Builder/Contractor is responsible for notifying the building authority of all changes to the order documents which result in changes to the drawings, supporting structural calculations and design certification.

Builder Acceptance of Drawings – Approval of the manufacturer's drawings and design data affirms that the manufacturer has correctly interpreted and applied the requirements of the order documents and constitutes Builder/Contractor acceptance of the manufacturer's interpretations of the order documents and standard product specifications, including its design, fabrication and quality criteria standards and tolerances. (AISC code of standard practice Sept 86 Section 4.2.1) (Mar 05 Section 4.4.1)

Code Official Approval – It is the responsibility of the Builder/Contractor to ensure that all project plans and specifications comply with the applicable requirements of any governing building authority. The Builder/Contractor is responsible for securing all required approvals and permits from the appropriate agency as required.

Builder is responsible for State, Federal and OSHA safety compliance – The Builder/Contractor is responsible for applying and observing all pertinent safety rules and regulations and OSHA standards as applicable.

Building Erection – The Builder/Contractor is responsible for all erection of the steel and associated work in compliance with the Metal Building Manufacturers drawings. Temporary supports, such as temporary guys, braces, false work or other elements required for erection will be determined, furnished and installed by the erector. (AISC Code of Standard Practice Sept 86 Section 7.9.1) (Mar 05 Section 7.10.3)

Discrepancies – Where discrepancies exist between the Metal Building plans and plans for other trades, the Metal Building plans will govern. (AISC Code of Standard Practice Sept 86 Section 3.3) (Mar 05 Section 3.3)

Materials by Others – All interface and compatibility of any materials not furnished by the manufacturer are the responsibility of and to be coordinated by the Builder/Contractor or A/E firm. Unless specific design criteria concerning any interface between materials if furnished as a part of the order documents, the manufacturers assumptions will govern.

Correction of Errors – Normal erection operations include the correction of minor misfits by moderate amounts of reaming, chipping, welding or cutting and the drawing of elements into line through the use of drift pins. Errors which cannot be corrected by the foregoing means or which require major changes in the member configuration should be reported immediately to the owner and fabricator by the erector, to enable whoever is responsible either to correct the error or to approve the most efficient and economical method of correction to be used by others. (AISC Code of Standard Practice Sept 86 Section 7.12)(Mar 05 Section 7.14)

Modification of the Metal Building from Plans – The Metal Building supplied by the manufacturer has been designed according to the Building Code and specifications and the loads shown on this drawing. Modification of the building configuration, such as removing wall panels or braces, from that shown on these plans could affect the structural integrity of the building. The Metal Building Manufacturer or a Licensed Structural Engineer should be consulted prior to making any changes to the building configuration shown on these drawings. The Metal Building Manufacturer will assume no responsibility for any loads applied to the building not indicated on these drawings.

Safety Commitment – The Metal Building Manufacturer has a commitment to manufacture quality building components that can be safely erected. However, the safety commitment and job site practices of the erector are beyond the control of the building manufacturer. It is strongly recommended that safe working conditions and accident prevention is the top priority of any job site. Local, State and Federal safety and health standards, whether standard statutory or customary, should always be followed to help ensure worker safety. Make certain all employees know the safest and most productive way to erect a building. Emergency procedures should be known to all employees. Daily meetings highlighting safety procedures are also recommended. The use of hard hats, rubber sole shoes for roof work, proper equipment for handling material, and safety nets where applicable, are recommended. For purposes of determining lift requirements, no bundles supplied by the manufacturer will exceed 4000 lbs. For further information also reference the bill of materials for individual member weights of other structural members. If additional information is required contact the customer service department.

Foundation Design – The Metal Building Manufacturer is not responsible for the design, materials and workmanship of the foundation. Anchor rod plans prepared by the manufacturer are intended to show only location, diameter and projection of the anchor rods required to attach the Metal Building System to the foundation. It is the responsibility of the end customer to ensure that adequate provisions are made for specifying rod embedment, bearing values, tie rods and or other associated items embedded in the concrete foundation, as well as foundation design for the loads imposed by the Metal Building System, other imposed loads, and the bearing capacity of the soil and other conditions of the building site. (MBMA 06 Sections 3.2.2 and A3)

Dissimilar Materials – Never allow your roof to come in contact with, or water runoff from, any dissimilar metal including but not limited to: Copper and Arsenic Salts used in treated lumber, Calcium used in concrete, mortar and grout.

Debris Removal – Any foreign debris such as sawdust, dirt, animal droppings, etc. will cause corrosion of the roof, gutters, trim, etc. if left on building surfaces for a long enough time. The roof should be periodically inspected for such conditions and if found, they should be removed.

Shop Primed Steel – All structural members of the Metal Building System not fabricated of corrosion resistant material or protected by a corrosion resistant coating are painted with one coat of shop primer meeting the performance requirements of SSPC Paint Specification No. 15. All surfaces to receive shop primer are cleaned of loose rust, loose mill scale and other foreign matter by using, as a minimum, the hand tool cleaning method SSPC–SP2 (Steel Structures Painting Council) prior to painting. The coat of shop primer is intended to protect the steel framing for only a short period of exposure to ordinary atmospheric conditions. Shop Primed steel stored in the field pending erection should be kept free of the ground and so positioned as to minimize water–holding pockets, dust, mud and other contamination of the primer film. Repairs of damage to primed surfaces and/or removal of foreign material due to improper field storage or site conditions are not the responsibility of the manufacturer. The Manufacturer is not responsible for deterioration of the shop coat of primer or corrosion that may result from exposure to atmospheric and environmental conditions, nor the compatibility of the primer to any field applied coating. Minor abrasions to the shop coat (including galvanizing) caused by handling, loading, shipping unloading and erection after painting or galvanizing are unavoidable. Touch–up of these minor abrasions is the responsibility of the End Customer (MBMA 06 IV 4.2.4)

PROJECT NOTES

Material properties of steel bar, plate, and sheet used in the fabrication of built–up structural framing members conform to ASTM A529, ASTM A572, ASTM A1011 SS, or ASTM A1011 HSLAS with a minimum yield point of 50 ksi. Material properties of hot rolled structural shapes conform to ASTM A992, ASTM A529, or ASTM A572 with a minimum specified yield point of 50 ksi. Hot rolled angles, or other than flange braces, conform to ASTM 36 minimum. Hollow structural shaped conform to ASTM A500 grade b, minimum yield point is 42 ksi for round HSS and 46 ksi for rectangular HSS. Material properties of cold form light gage steel members conform to the requirements of ASTM A1011 SS Grade 55 or ASTM A1011 HSLAS Class 1 Grade 55, with a minimum yield point of 55 ksi.

All bolt joints with A325 Type 1 bolts are specified as snug–tightened joints, unless noted otherwise, in accordance with the "Specification for Structural Joints using ASTM A325 or A490 bolts, June 30, 2004". Pretensioning methods, including turn–of–nut and calibrated wrench are not required unless noted otherwise.

The manufacturer does not assume any responsibility for the erection nor field supervision of the structure and or any special inspections (including inspection of the high strength bolts or field welds) as required during erection. The coordination and the costs associated for setting up and Special Inspections are the responsibility of the Erector, Owner, Architect, or Engineer of Record.

Design is based upon the more severe loading of either the roof snow load or the roof live load.

Loads, as noted, are given within order documents and are applied in general accordance with the applicable provisions of the model code and/or specification indicated. Neither the manufacture nor the certifying engineer declares or attests that the loads as designated are proper for the local provisions that may apply or for site specific parameters. The manufacturer's Engineer's certification is limited to design loads supplied by an Architect and/or engineer of record for the overall construction project.

This project is designed using manufacture's standard serviceability standards. Generally this means that all stresses and deflections are within typical performance limits for normal occupancy and standard metal building products. If special requirements for deflections and vibrations must be adhered to, then they must be clearly stated in the contract documents.

X–bracing (if applicable) is to be installed to a taut condition with all slack removed. Do not tighten beyond this state.

The design collateral load has been uniformly applied to the design of the building. Hanging loads are to be attached to the purlin web. This may not be appropriate for heavily concentrated loads. Any attached load in excess of 150 pounds shall be accounted for by special design performed by a licensed engineer using concentrated loads and may require separate support members within the roof system.

This metal building system is designed as enclosed. All exterior components (i.e. doors, windows, vents, etc.) must be designed to withstand the specified wind loading for the design of components and cladding in accordance with the specified building code. Doors are to be closed when a maximum of 50% of design wind velocity is reached.

DESIGN LOADING

THIS STRUCTURE IS DESIGNED UTILIZING THE LOADS INDICATED AND APPLIED AS REQUIRED BY:

CBC 16

THE BUILDER IS TO CONFIRM THAT THESE LOADS COMPLY WITH THE REQUIREMENTS OF THE LOCAL BUILDING DEPARTMENT.

ROOF DEAD LOAD

SUPERIMPOSED	2.000 PSF
COLLATERAL	3 PSF
ROOF LIVE LOAD	20.00 PSF (REDUCIBLE)
RISK CATEGORY	II – Normal

SNOW LOAD

GROUND SNOW LOAD (Pg)	0.0000 PSF
SNOW LOAD IMPORTANCE FACTOR (Is)	1.0000
FLAT ROOF SNOW LOAD (Pf)	0 PSF
SNOW EXPOSURE FACTOR (Ce)	1.0
THERMAL FACTOR (Ct)	1.00

WIND LOAD

ULTIMATE WIND SPEED	110 MPH
NOMINAL WIND SPEED(VASD)	85 MPH(IBC SECTION 1609.3.1)
SERVICEABILITY WIND SPEED	72 MPH
WIND EXPOSURE CATEGORY	C
TOPOGRAPHICAL FACTOR	1.0
INTERNAL PRESSURE COEFFICIENT (GCpi)	0.18 /–0.18

ZONE 4, COMPONENT WIND LOAD ≤ $10FT^2$

24.455 PSF PRESSURE –26.493 PSF SUCTION

ZONE 5, COMPONENT WIND LOAD < $10FT^2$

24.455 PSF PRESSURE –32.545 PSF SUCTION

ZONES PER ASCE 7–10; FIG. 30.4–1
ZONES PRESSURES SHOWN ARE UN–FACTORED

RAIN INTENSITY

5–MINUTE DURATION, 5–YEAR RECURRENCE (I1) 2.4000 IN/HOUR

SEISMIC LOAD

SEISMIC IMPORTANCE FACTOR (Ie)	1.00		
S_s	2.8657 g	S_{DS}	1.0000 g
S1	1.1229 g	S_{D1}	1.1220 g
SOIL SITE CLASS	D STIFF SOIL		
SEISMIC DESIGN CATEGORY	E		

ANALYSIS PROCEDURE: EQUIVALENT LATERAL FORCE

COLUMN LINE	2,3	SWA	1,4&SWC
BASIC FORCE RESISTING SYSTEM*	C4	C4	B3
RESPONSE MODIFICATION COEFFICIENT(R)	3.25	3.5	3.25
SYSTEM OVER–STRENGTH FACTOR(Ω_0)	2.5000	2.5000	2.0000
SEISMIC RESPONSE COEFFICIENT(C_s)	0.308	0.286	0.308

BLDG DESIGN BASE SHEAR (V) TRANSVERSE 6.23 (k) LONGITUDINAL 5.98 (k)

Cs is determined using an Ss=1.5 as per section 12.8.13 of ASCE 7–1Basic Structural System (from ASCE 7–10 Table 12.2–1)

THE TRANSVERSE DIRECTION IS PARALLEL TO THE RIGID FRAMES
THE LONGITUDINAL DIRECTION IS PERPENDICULAR TO THE RIGID FRAMES

BASIC FORCE RESISTING SYSTEM*

C4. STEEL ORDINARY MOMENT FRAME
B3. STEEL ORDINARY CONCENTRIC BRACED FRAMES

DRAWING INDEX

ISSUE	PAGE	DESCRIPTION
A	C1	COVER SHEET
D	F1	ANCHOR BOLT PLAN
D	F2	ANCHOR BOLT REACTIONS
D	F3	ANCHOR BOLT DETAILS
A	E1	ROOF FRAMING PLAN
A	E2	ROOF SHEETING PLAN
A	E3	FRONT SIDEWALL
A	E4	BACK SIDEWALL
A	E5	LEFT ENDWALL
A	E6	RIGHT ENDWALL
A	E7	FRAME CROSS SECTION
A	E8	WIND BENT DETAILS
A	DET1–12	STANDARD DETAILS

DRAWING STATUS

☐ FOR APPROVAL

THESE DRAWINGS, BEING FOR APPROVAL, ARE BY DEFINITION NOT FINAL, AND ARE FOR CONCEPTUAL REPRESENTATION ONLY. THEIR PURPOSE IS TO CONFIRM PROPER INTERPRETATION OF THE PROJECT DOCUMENTS. ONLY DRAWINGS ISSUED "FOR ERECTOR INSTALLATION" CAN BE CONSIDERED AS COMPLETE.

☒ FOR CONSTRUCTION PERMIT

THESE DRAWINGS, BEING FOR PERMIT, ARE BY DEFINITION NOT FINAL. ONLY DRAWINGS ISSUED "FOR ERECTOR INSTALLATION" CAN BE CONSIDERED AS COMPLETE.

☐ FOR ERECTOR INSTALLATION

FINAL DRAWINGS FOR CONSTRUCTION.

FOR QUESTIONS OR ASSISTANCE CONCERNING ERECTION CALL:

858–362–0464

MONDAY – FRIDAY 7:30AM TO 5:00PM

ENGINEERING SEAL

THIS CERTIFICATION COVERS PARTS MANUFACTURED AND DELIVERED BY THE MANUFACTURER ONLY, AND EXCLUDES PARTS SUCH AS DOORS, WINDOWS, FOUNDATION DESIGN AND ERECTION OF THE BUILDING.

THESE DRAWINGS AND THE METAL BUILDING SYSTEM THEY REPRESENT ARE THE PRODUCT OF AN AFFILIATE OF NCI GROUP, INC. – 10943 N. SAM HOUSTON PARKWAY W., HOUSTON, TX 77064. THE PROFESSIONAL ENGINEER WHOSE SEAL APPEARS HEREON IS EMPLOYED BY AN AFFILIATE OF NCI GROUP, INC. AND IS NOT THE ENGINEER–OF–RECORD FOR THE OVERALL PROJECT.

BUILDING SIZE: 40'–0" x 60'–0" x 16'–0" 2.0:12

ISSUE	DATE	DESCRIPTION	BY	CK'D	DSN
A	7/28/17	FOR CONSTRUCTION PERMIT	PNR	PNR	MTR

EMPIRE STEEL BUILDINGS

5230 CARROLL CANYON ROAD,
SAN DIEGO,CALIFORNIA 92121 US.

PROJECT: FILEDBROOK HIGH SCHOOL
CUSTOMER: ATLAS OWNER: ATLAS
LOCATION: MCKINLEYVILLE, CA 95519

CAD	DATE	SCALE	PHASE	BUILDING ID	JOB NUMBER	SHEET NUMBER	ISSUE
	7/28/17	N.T.S.	1	A	15–B–94950	C1	A

REGISTERED PROFESSIONAL ENGINEER
KOUROSH IRANPOUR
C 045220
EXP. 09/30/18
Aug 01, 2017
CIVIL
STATE OF CALIFORNIA

Rev. 8/12/14

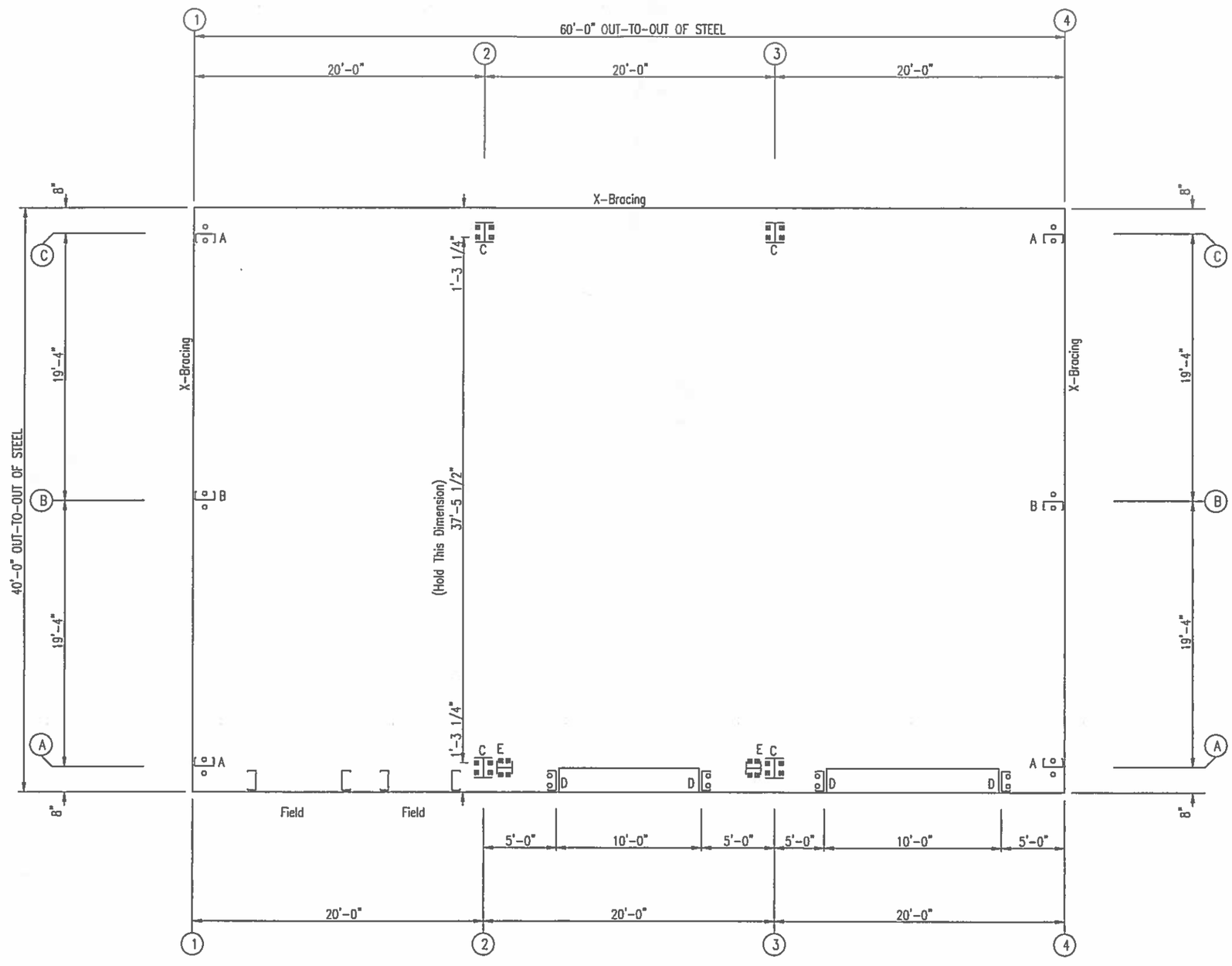

ANCHOR BOLT PLAN

NOTE: ALL BASE PLATES @ 100.0' (U.N.)
ASSUMED FINISH FLOOR @ 100.0' (U.N.)

ISSUE	DATE	DESCRIPTION	BY	CK'D	DSN
0	7/28/17	FOR ERECTOR INSTALLATION	PNR	PNR	MTR

EMPIRE STEEL BUILDINGS
5230 CARROLL CANYON ROAD,
SAN DIEGO,CALIFORNIA 92121 US.

PROJECT: FILEDBROOK HIGH SCHOOL
CUSTOMER: ATLAS
OWNER: ATLAS
LOCATION: MCKINLEYVILLE, CA 95519

CAD	DATE	SCALE	PHASE	BUILDING ID	JOB NUMBER	SHEET NUMBER	ISSUE
	7/28/17	N.T.S.	1	A	15-B-94950	F1	0

REGISTERED PROFESSIONAL ENGINEER
KOUROSH IRANPOUR
C 045220
EXP. 09/30/18
Aug 01, 2017
CIVIL
STATE OF CALIFORNIA

BUILDING BRACING REACTIONS

Wall Loc	Wall Line	Col Line	Reactions in plane of wall ± Reactions(k) Wind Horz	Wind Vert	Seismic Horz	Seismic Vert	Panel_Shear (lb/ft) Wind	Panel_Shear (lb/ft) Seis	Note
L_EW	1	C,B	Bracing, see EW reactions						
F_SW	A	2,3							(a)
R_EW	4	B,C	Bracing, see EW reactions						
B_SW	C	3,2	3.0 *		3.1 *				

(a)Wind bent in bay

*See RF reactions table for vertical and horizontal reactions in plane of the rigid frame.

NOTES FOR REACTIONS

BUILDING REACTIONS ARE BASED ON THE FOLLOWING BUILDING DATA:

WIDTH (FT)	= 40
LENGTH (FT)	= 60
EAVE HEIGHT (FT)	= 16 / 16
ROOF SLOPE (rise/12)	= 2.0:12 / 2.0:12
DEAD LOAD (psf)	= 2.000
COLLATERAL LOAD (psf)	= 3
ROOF LIVE LOAD (psf)	= 20.00 (REDUCIBLE)
FRAME LIVE LOAD (psf)	= 12
ROOF SNOW LOAD (psf)	= 0
GROUND SNOW LOAD (psf)	= 0.0000
ULTIMATE WIND SPEED (MPH)	= 110
NOMINAL WIND SPEED (VASD) (MPH)	= 85 (IBC SECTION 1609.3.1)
SERVICEABILITY WIND SPEED (MPH)	= 72
WIND CODE	= CBC 16
EXPOSURE	= C
CLOSED/OPEN	= Closed
IMPORTANCE - WIND	= 1.00
IMPORTANCE - SEISMIC	= 1.00
SEISMIC ZONE	= E

FRAME LINES: 2 3

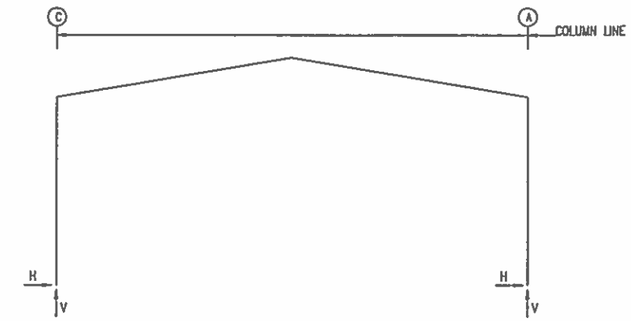

ANCHOR BOLT SUMMARY

	Qty	Locate	Dia (in)	Type	Proj (in)
O	8	Jamb	5/8"	F1554	2.00
O	12	Endwall	5/8"	F1554	2.00
⊠	16	Frame	3/4"	F1554	2.50
⊠	8	WindCol	3/4"	F1554	2.50

RIGID FRAME: ANCHOR BOLTS & BASE PLATES

Frm Line	Col Line	Anc_Bolt Qty	Anc_Bolt Dia	Base_Plate (in) Width	Base_Plate (in) Length	Base_Plate (in) Thick	Grout (in)
2*	C	4	0.750	6.000	9.500	0.375	0.0
2*	A	4	0.750	6.000	9.500	0.375	0.0

2* Frame lines: 2 3

GENERAL NOTES

1. THE REACTIONS PROVIDED ARE BASED ON THE ORDER DOCUMENTS AT THE TIME OF MAILING. ANY CHANGES TO BUILDING LOADS OR DIMENSIONS MAY CHANGE THE REACTIONS. THE REACTIONS WILL BE SUPERSEDED AND VOIDED BY ANY FUTURE MAILING.
2. REACTIONS ARE PROVIDED AS UN-FACTORED FOR EACH LOAD GROUP APPLIED TO THE COLUMN. THE FOUNDATION ENGINEER WILL APPLY THE APPROPRIATE LOAD FACTORS AND COMBINE THE REACTIONS IN ACCORDANCE WITH THE BUILDING CODE AND DESIGN SPECIFICATIONS TO DETERMINE BEARING PRESSURES AND CONCRETE DESIGN. THE FACTORS APPLIED TO LOAD GROUPS FOR THE STEEL COLUMN DESIGN MAY BE DIFFERENT THAN THE FACTORS USED IN THE FOUNDATION DESIGN.
3. THE MANUFACTURER DOES NOT PROVIDE "MAXIMUM" LOAD COMBINATION REACTIONS. HOWEVER, THE INDIVIDUAL LOAD REACTIONS PROVIDED MAY BE USED BY THE FOUNDATION ENGINEER TO DETERMINE THE APPLICABLE LOAD COMBINATIONS FOR HIS/HER DESIGN PROCEDURES AND ALLOW FOR AN ECONOMICAL FOUNDATION DESIGN
4. THE METAL BUILDING MANUFACTURER IS RESPONSIBLE FOR THE DESIGN OF THE ANCHOR BOLT DIAMETER ONLY TO PERMIT THE TRANSFER OF FORCES BETWEEN THE BASE PLATE AND THE ANCHOR BOLT IN SHEAR, BEARING AND TENSION, BUT IS NOT RESPONSIBLE FOR THE ANCHOR BOLT EMBEDMENT FOR TRANSFER OF FORCES TO THE FOUNDATION. THE METAL BUILDING MANUFACTURER DOES NOT DESIGN AND IS NOT RESPONSIBLE FOR THE DESIGN, MATERIAL AND CONSTRUCTION OF THE FOUNDATION EMBEDMENTS. THE END USE CUSTOMER SHOULD ASSURE HIMSELF THAT ADEQUATE PROVISIONS ARE MADE IN THE FOUNDATION DESIGN FOR LOADS IMPOSED BY COLUMN REACTIONS OF THE BUILDING, OTHER IMPOSED LOADS, AND BEARING CAPACITY OF THE SOIL AND OTHER CONDITIONS OF THE BUILDING SITE. IT IS RECOMMENDED THAT THE ANCHORAGE AND FOUNDATION OF THE BUILDING BE DESIGNED BY A REGISTERED PROFESSIONAL ENGINEER EXPERIENCED IN THE DESIGN OF SUCH STRUCTURES, (SECTION A3 MBMA 2006 METAL BUILDING SYSTEMS MANUAL)
5. BOTTOM OF ALL BASE PLATES ARE AT THE SAME ELEVATION. (UNLESS NOTED)
6. ANCHOR RODS ARE ASTM F1554 GRADE 36 MATERIAL UNLESS NOTED OTHERWISE.

RIGID FRAME: BASIC COLUMN REACTIONS (k)

Frame Line	Column Line	Dead Horiz	Dead Vert	Collateral Horiz	Collateral Vert	Live Horiz	Live Vert	Wind_Left1 Horiz	Wind_Left1 Vert	Wind_Right1 Horiz	Wind_Right1 Vert	Wind_Left2 Horiz	Wind_Left2 Vert
2*	C	0.3	1.3	0.4	1.2	1.6	4.8	-4.4	-8.3	1.2	-4.8	-4.8	-5.1
2*	A	-0.3	1.3	-0.4	1.2	-1.6	4.8	-1.2	-4.8	4.4	-8.3	-0.9	-1.5

Frame Line	Column Line	Wind_Right2 Horiz	Wind_Right2 Vert	Wind_Long1 Horiz	Wind_Long1 Vert	Wind_Long2 Horiz	Wind_Long2 Vert	Seismic_Left Horiz	Seismic_Left Vert	Seismic_Right Horiz	Seismic_Right Vert	Seismic_Long Horiz	Seismic_Long Vert
2*	C	0.9	-1.5	0.4	-9.1	-0.1	-8.0	-1.2	-1.0	1.2	1.0	0.0	-2.8
2*	A	4.8	-5.1	0.1	-5.9	-0.4	-7.0	-1.2	1.0	1.2	-1.0	0.0	0.0

2* Frame lines: 2 3

ENDWALL COLUMN: BASIC COLUMN REACTIONS (k)

Frm Line	Col Line	Dead Vert	Collat Vert	Live Vert	Wind_Left1 Horz	Wind_Left1 Vert	Wind_Right1 Horz	Wind_Right1 Vert	Wind_Left2 Horz	Wind_Left2 Vert	Wind_Right2 Horz	Wind_Right2 Vert	Wind Press Horz	Wind Suct Horz
1	C	0.3	0.2	1.6	1.5	-3.5	0.0	0.3	1.6	-3.5	0.0	0.4	0.0	0.0
1	B	0.8	0.7	4.9	0.0	-3.4	1.5	-6.5	0.0	-3.4	1.6	-6.5	-3.4	3.7
1	A	0.3	0.2	1.6	0.0	-1.3	0.0	-2.0	0.0	-1.3	0.0	-2.0	0.0	0.0
4	A	0.3	0.2	1.6	0.0	-2.0	0.0	-1.3	0.0	-2.0	0.0	-1.3	-1.5	1.7
4	B	0.8	0.7	4.9	1.5	-6.5	0.0	-3.4	1.6	-6.5	0.0	-3.4	-3.4	3.7
4	C	0.3	0.2	1.6	0.0	0.3	1.5	-3.5	0.0	0.4	1.6	-3.5	0.0	0.0

Frm Line	Col Line	Wind_Long1 Horz	Wind_Long1 Vert	Wind_Long2 Horz	Wind_Long2 Vert	Seis_Left Horz	Seis_Left Vert	Seis_Right Horz	Seis_Right Vert
1	C	0.0	-1.8	0.4	-1.4	1.5	-1.4	0.0	1.6
1	B	0.4	-5.2	0.0	-4.5	0.0	1.4	1.5	-1.7
1	A	0.0	-1.1	0.0	-2.2	0.0	-0.1	0.0	0.1
4	A	0.0	-2.2	0.0	-1.1	0.0	0.1	0.0	-0.1
4	B	0.0	-4.5	0.4	-5.2	1.5	-1.7	0.0	1.4
4	C	0.4	-1.4	0.0	-1.8	0.0	1.6	1.5	-1.4

ENDWALL COLUMN: ANCHOR BOLTS & BASE PLATES

Frm Line	Col Line	Anc_Bolt Qty	Anc_Bolt Dia	Base_Plate (in) Width	Base_Plate (in) Length	Base_Plate (in) Thick	Grout (in)
1	C	2	0.625	7.000	8.000	0.250	0.0
1	B	2	0.625	7.000	8.000	0.250	0.0
1	A	2	0.625	7.000	8.000	0.250	0.0
4	A	2	0.625	7.000	8.000	0.250	0.0
4	B	2	0.625	7.000	8.000	0.250	0.0
4	C	2	0.625	7.000	8.000	0.250	0.0

WIND BENT REACTIONS

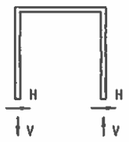

Wall Loc	Wall Line	Col Line	± Reactions Wind(k) Horz	Wind Vert	Seismic(k) Horz	Seismic Vert	Bolt(in) Qty	Bolt(in) Dia	Base_Plate(in) Width	Base_Plate(in) Length	Base_Plate(in) Thick
F_SW	A	2	1.5	2.5	1.4	2.3	4	0.750	6.000	12.500	0.375
F_SW	A	3	1.5	2.5	1.4	2.3	4	0.750	6.000	12.500	0.375

ISSUE	DATE	DESCRIPTION	BY	CK'D	DSN
0	7/28/17	FOR ERECTOR INSTALLATION	PNR	PNR	MTR

EMPIRE STEEL BUILDINGS

5230 CARROLL CANYON ROAD,
SAN DIEGO,CALIFORNIA 92121 US.

PROJECT: FILEDBROOK HIGH SCHOOL
CUSTOMER: ATLAS
OWNER: ATLAS
LOCATION: MCKINLEYVILLE, CA 95519

CAD	DATE	SCALE	PHASE	BUILDING ID	JOB NUMBER	SHEET NUMBER	ISSUE
	7/28/17	N.T.S.	1	A	15-B-94950	F2	0

REGISTERED PROFESSIONAL ENGINEER
KOUROSH IRANPOUR
C 045220
EXP. 09/30/18
Aug 01, 2017
CIVIL
STATE OF CALIFORNIA

Dia= 5/8"

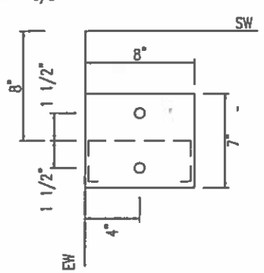

DETAIL A

Dia= 3/4"

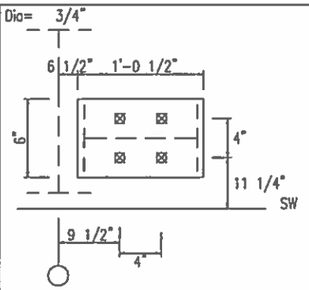

DETAIL E

Dia= 5/8"

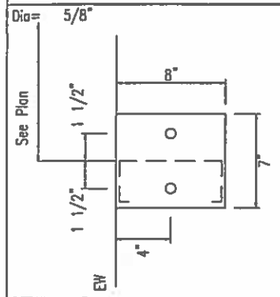

DETAIL B

Dia= 3/4"

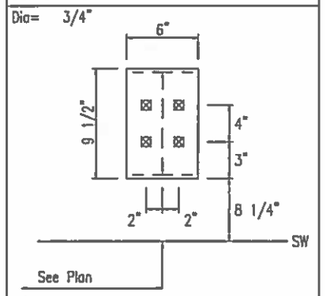

DETAIL C

Dia= 5/8"

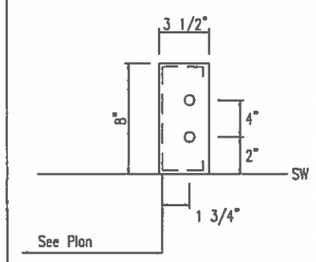

DETAIL D

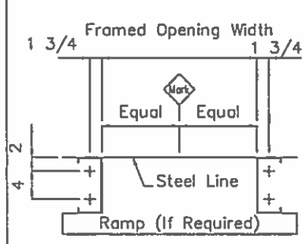

ARDia 5/8" Framed Opening AR Layout

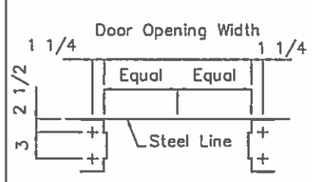

AR Dia 1/2" Walk Door AR Layout

ISSUE	DATE	DESCRIPTION	BY	CK'D	DSN
0	7/28/17	FOR ERECTOR INSTALLATION	PNR	PNR	MTR

EMPIRE STEEL BUILDINGS

5230 CARROLL CANYON ROAD,
SAN DIEGO,CALIFORNIA 92121 US.

PROJECT: FILEDBROOK HIGH SCHOOL

CUSTOMER: ATLAS | OWNER: ATLAS

LOCATION: MCKINLEYVILLE, CA 95519

CAD	DATE	SCALE	PHASE	BUILDING ID	JOB NUMBER	SHEET NUMBER	ISSUE
	7/28/17	N.T.S.	1	A	15-B-94950	F3	0

REGISTERED PROFESSIONAL ENGINEER
KOUROSH IRANPOUR
C 045220
EXP. 09/30/18
Aug 01, 2017
CIVIL
STATE OF CALIFORNIA

MEMBER TABLE ROOF PLAN		
MARK	PART	LENGTH
P-1	8X25Z16	21'-5 1/2"
P-2	8X25Z16	22'-11 1/2"
P-3	8X25Z16	21'-5 1/2"
E-1	8ES2L14	19'-11 1/2"
E-2	8ES2L14	19'-11 1/2"
E-3	8ES2L14	19'-11 1/2"
CB-4	1/2" DIA. ROD	27'-3"

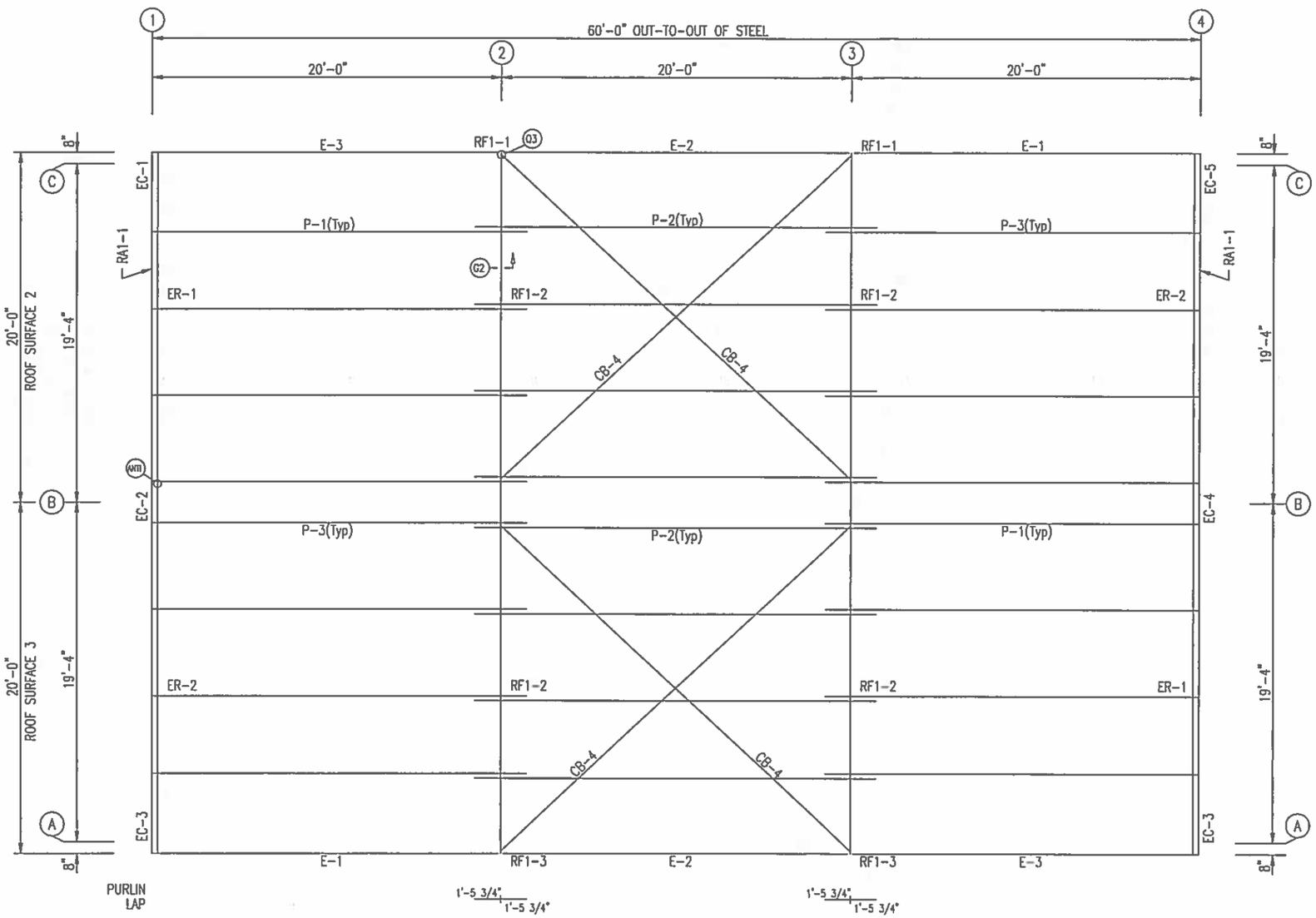

ROOF FRAMING PLAN

NOTE:
LTP'S TO BE FIELD LOCATED & FIELD CUT (BY OTHERS)

INSTALLATION MUST COMPLY WITH OSHA REQUIREMENTS

GENERAL NOTES:

1. INSTALL ALL PURLIN AND FLANGE BRACES (FB) AS SHOWN.
2. ROOF PANEL PROVIDES STRUCTURAL STABILITY TO THE BUILDING.
3. STRUT PURLINS, IF PROVIDED, MUST BE INSTALLED AND FASTENED TO ROOF SHEETING PER "PBR" PANEL ROOF DETAIL.
4. DO NOT ADD ANY ADDITIONAL ROOF OPENINGS WITHOUT BUILDING MANUFACTURER APPROVAL OR PROFESSIONAL ENGINEER APPROVAL.
5. DO NOT STACK SHEET BUNDLES ON ROOF. ONLY RAISE INDIVIDUAL SHEETS AS NEEDED.
6. AFTER INSTALLATION, WIPE ALL PANELS CLEAN OF METAL SHAVINGS CAUSED BY DRILLING.

ISSUE	DATE	DESCRIPTION	BY	CK'D	DSN
A	7/28/17	FOR CONSTRUCTION PERMIT	PNR	PNR	MTR

EMPIRE STEEL BUILDINGS
5230 CARROLL CANYON ROAD,
SAN DIEGO,CALIFORNIA 92121 US.

PROJECT: FILEDBROOK HIGH SCHOOL
CUSTOMER: ATLAS
OWNER: ATLAS
LOCATION: MCKINLEYVILLE, CA 95519

CAD	DATE	SCALE	PHASE	BUILDING ID	JOB NUMBER	SHEET NUMBER	ISSUE
	7/28/17	N.T.S.	1	A	15-B-94950	E1	A

REGISTERED PROFESSIONAL ENGINEER
KOUROSH IRANPOUR
C 045220
EXP. 09/30/18
Aug 01, 2017
CIVIL
STATE OF CALIFORNIA

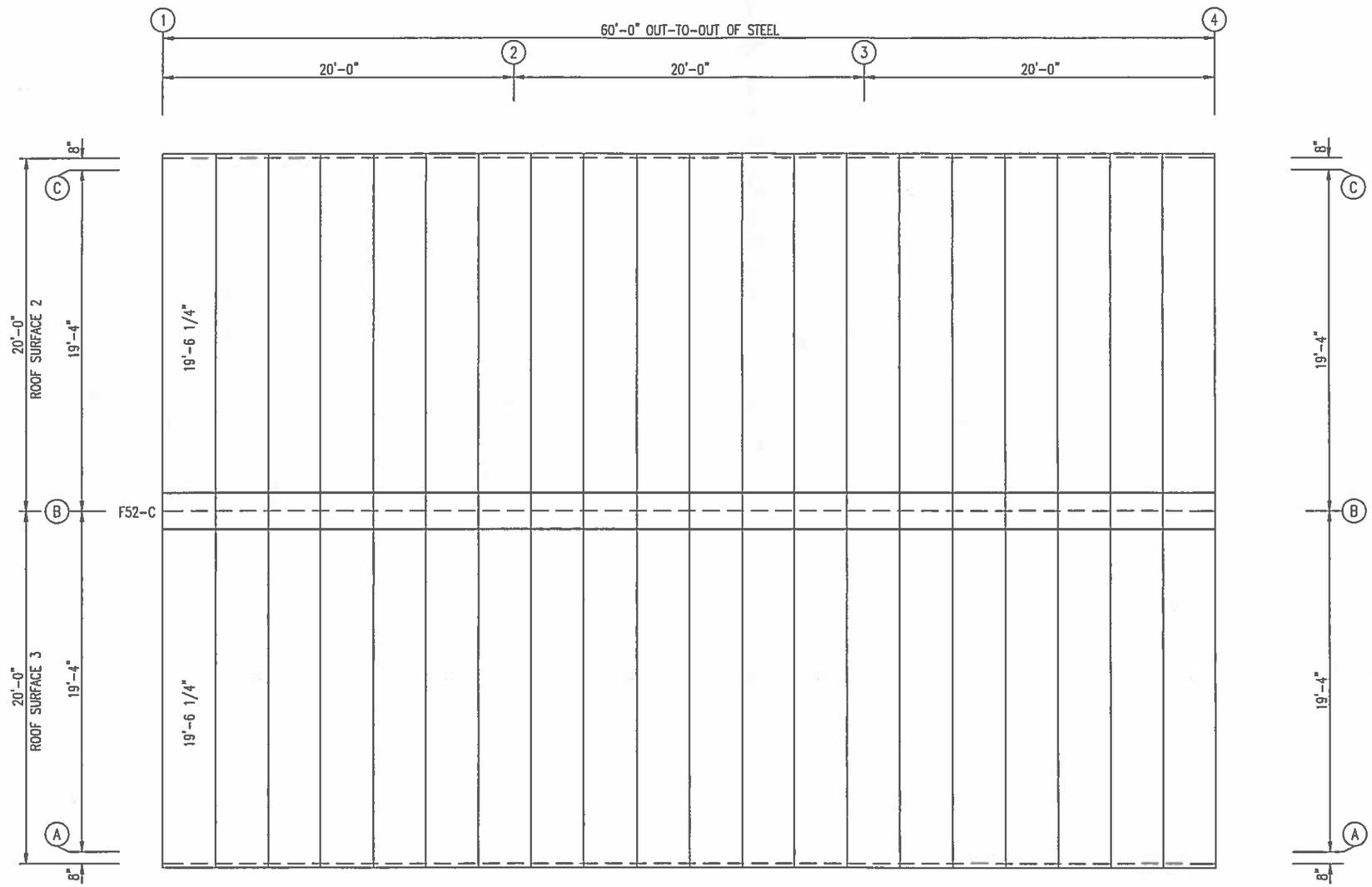

ROOF SHEETING PLAN

PANELS: 26 Gauge PBR – TBD

GENERAL NOTES:

1. INSTALL ALL PURLIN AND FLANGE BRACES (FB) AS SHOWN.
2. ROOF PANEL PROVIDES STRUCTURAL STABILITY TO THE BUILDING.
3. STRUT PURLINS, IF PROVIDED, MUST BE INSTALLED AND FASTENED TO ROOF SHEETING PER "PBR" PANEL ROOF DETAIL.
4. DO NOT ADD ANY ADDITIONAL ROOF OPENINGS WITHOUT BUILDING MANUFACTURER APPROVAL OR PROFESSIONAL ENGINEER APPROVAL.
5. DO NOT STACK SHEET BUNDLES ON ROOF. ONLY RAISE INDIVIDUAL SHEETS AS NEEDED.
6. AFTER INSTALLATION, WIPE ALL PANELS CLEAN OF METAL SHAVINGS CAUSED BY DRILLING.

ISSUE	DATE	DESCRIPTION	BY	CK'D	DSN
A	7/28/17	FOR CONSTRUCTION PERMIT	PNR	PNR	MTR

EMPIRE STEEL BUILDINGS

5230 CARROLL CANYON ROAD,
SAN DIEGO,CALIFORNIA 92121 US.

PROJECT: FILEDBROOK HIGH SCHOOL

CUSTOMER: ATLAS | OWNER: ATLAS

LOCATION: MCKINLEYVILLE, CA 95519

CAD	DATE	SCALE	PHASE	BUILDING ID	JOB NUMBER	SHEET NUMBER	ISSUE
	7/28/17	N.T.S.	1	A	15-B-94950	E2	A

REGISTERED PROFESSIONAL ENGINEER
KOUROSH IRANPOUR
C 045220
EXP. 09/30/18
Aug 01, 2017
CIVIL
STATE OF CALIFORNIA

BOLT TABLE FRAME LINE A				
LOCATION	QUAN	TYPE	DIA	LENGTH
WF-1 - WF-2	16	A325	3/4"	2"
WF-1 - RF1-3	48	A325	5/8"	1 1/2"

MEMBER TABLE FRAME LINE A		
MARK	PART	LENGTH
WF-1	W12643	15'-1"
WF-2	W12643	16'-9 1/2"
DJ-1	8F25C16	7'-6"
DJ-2	8F25C16	7'-6"
DJ-3	8F35C12	12'-0"
GH-06	GH-06	5'-10 1/2"
DH-3	8F25C16	10'-0"
DS-1	8F25C16	5'-10 1/2"
E-1	8ES2L14	19'-11 1/2"
E-2	8ES2L14	19'-11 1/2"
E-3	8ES2L14	19'-11 1/2"
G-3	8X35Z14	19'-11 1/2"
G-4	8X25Z16	21'-5 1/2"
G-5	8X25Z16	4'-8"
G-6	8X25Z16	22'-11 1/2"
G-7	8X25Z16	4'-8"
G-8	8X25Z16	21'-5 1/2"
G-9	8X25Z16	4'-8"

CONNECTION PLATES FRAME LINE A	
ID	MARK/PART
1	SC-480

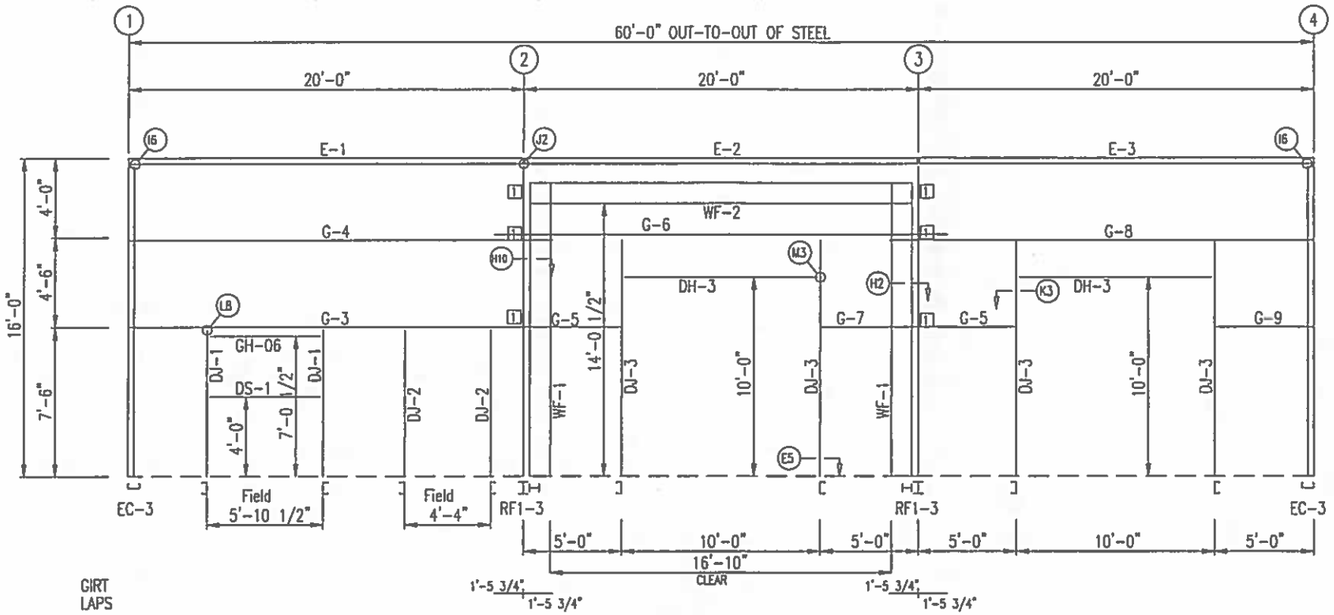

SIDEWALL FRAMING: FRAME LINE A

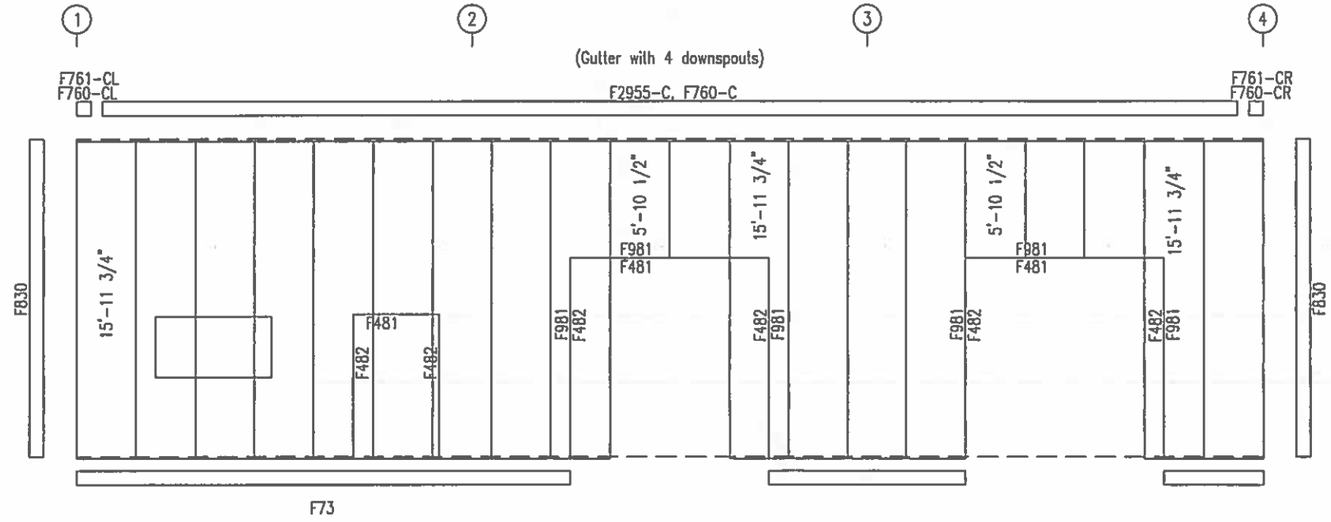

SIDEWALL SHEETING & TRIM: FRAME LINE A

PANELS: 26 Gauge PBR - Polar White

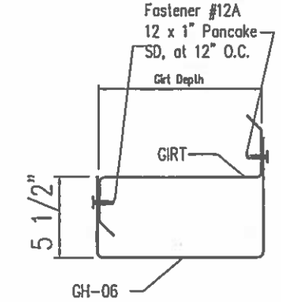

DOWNSPOUT SPACING LOCATIONS

DOWNSPOUTS ARE TO BE PLACED AT A SPACING NOT TO EXCEED 15 FT. WITH A DOWNSPOUT WITHIN 7.5 FT. OF EACH END OF THE GUTTER RUN.

GENERAL NOTES:

1. INSTALL ALL GIRTS AND FLANGE BRACES (FB) AS SHOWN.
2. WALL PANEL PROVIDES STRUCTURAL STABILITY TO THE BUILDING.
3. OTHER THAN FOR WALK DOORS AND WINDOWS SHOWN ON THE CONTRACT, DO NOT ADD ADDITIONAL WALL OPENINGS WITHOUT APPROVAL OF BUILDING MANUFACTURER OR PROFESSIONAL ENGINEER.
4. AFTER INSTALLATION, WIPE ALL PANELS CLEAN OF METAL SHAVINGS CAUSED BY DRILLING.

ISSUE	DATE	DESCRIPTION	BY	CK'D	DSN
A	7/28/17	FOR CONSTRUCTION PERMIT	PNR	PNR	MTR

EMPIRE STEEL BUILDINGS

5230 CARROLL CANYON ROAD,
SAN DIEGO,CALIFORNIA 92121 US.

PROJECT: FILEDBROOK HIGH SCHOOL

CUSTOMER: ATLAS | OWNER: ATLAS

LOCATION: MCKINLEYVILLE, CA 95519

CAD	DATE	SCALE	PHASE	BUILDING ID	JOB NUMBER	SHEET NUMBER	ISSUE
	7/28/17	N.T.S.	1	A	15-B-94950	E3	A

REGISTERED PROFESSIONAL ENGINEER
KOUROSH IRANPOUR
C 045220
EXP. 09/30/18
Aug 01, 2017
CIVIL
STATE OF CALIFORNIA

MEMBER TABLE FRAME LINE C		
MARK	PART	LENGTH
E-1	8ES2L14	19'-11 1/2"
E-2	8ES2L14	19'-11 1/2"
E-3	8ES2L14	19'-11 1/2"
G-4	8X25Z16	21'-5 1/2"
G-10	8X25Z16	22'-11 1/2"
G-11	8X25Z16	21'-5 1/2"
CB-3	1/2" DIA. ROD	25'-2"

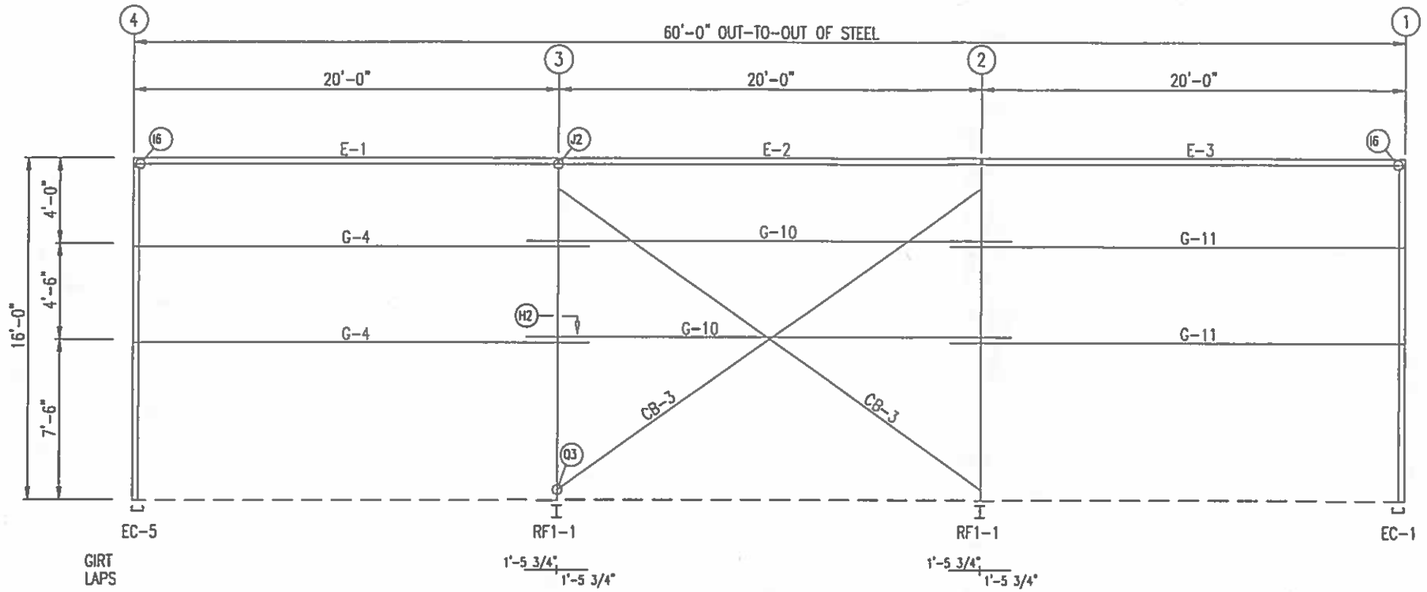

SIDEWALL FRAMING: FRAME LINE C

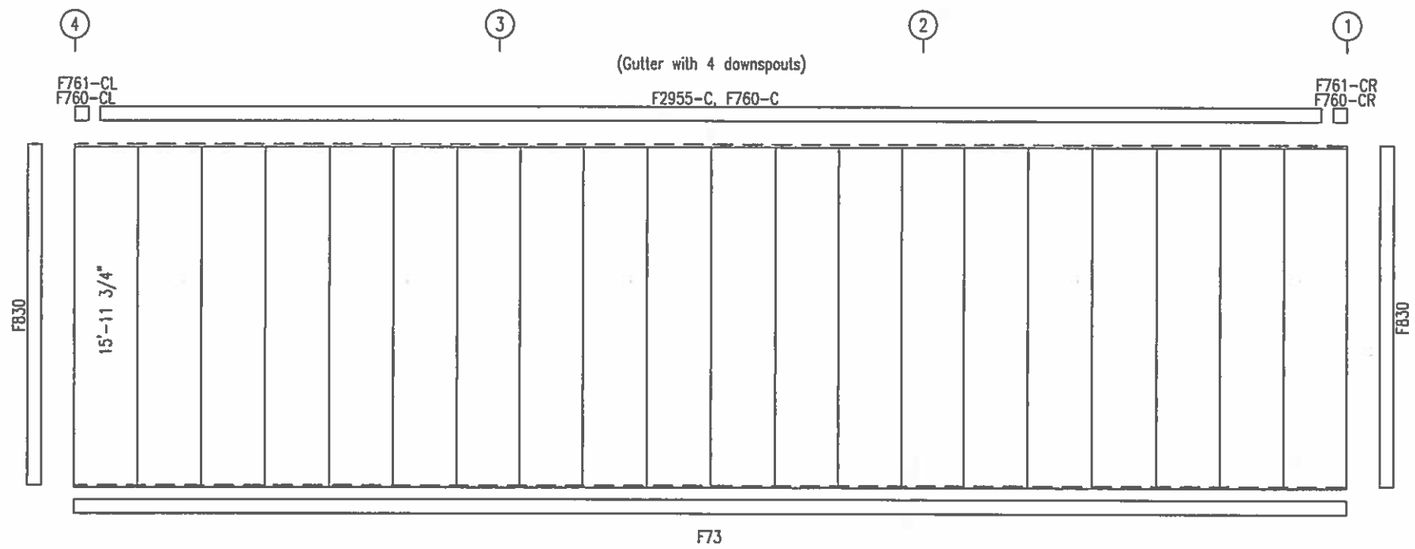

SIDEWALL SHEETING & TRIM: FRAME LINE C

PANELS: 26 Gauge PBR – Polar White

GENERAL NOTES:

1. INSTALL ALL GIRTS AND FLANGE BRACES (FB) AS SHOWN.
2. WALL PANEL PROVIDES STRUCTURAL STABILITY TO THE BUILDING.
3. OTHER THAN FOR WALK DOORS AND WINDOWS SHOWN ON THE CONTRACT, DO NOT ADD ADDITIONAL WALL OPENINGS WITHOUT APPROVAL OF BUILDING MANUFACTURER OR PROFESSIONAL ENGINEER.
4. AFTER INSTALLATION, WIPE ALL PANELS CLEAN OF METAL SHAVINGS CAUSED BY DRILLING.

ISSUE	DATE	DESCRIPTION	BY	CK'D	DSN
A	7/28/17	FOR CONSTRUCTION PERMIT	PNR	PNR	MTR

EMPIRE STEEL BUILDINGS
5230 CARROLL CANYON ROAD,
SAN DIEGO,CALIFORNIA 92121 US.

PROJECT: FILEDBROOK HIGH SCHOOL
CUSTOMER: ATLAS
OWNER: ATLAS
LOCATION: MCKINLEYVILLE, CA 95519

CAD	DATE	SCALE	PHASE	BUILDING ID	JOB NUMBER	SHEET NUMBER	ISSUE
	7/28/17	N.T.S.	1	A	15-B-94950	E4	A

REGISTERED PROFESSIONAL ENGINEER
KOUROSH IRANPOUR
C 045220
EXP. 09/30/18
Aug 01, 2017
CIVIL
STATE OF CALIFORNIA

BEARING FRAME ONLY!
WASHER TO BE USED AT ENDWALL COLUMN TO ENDWALL RAFTER CONNECTION. USE ONE WASHER ON COLUMN SIDE. WASHER NOT NEEDED ON CLIP SIDE.

BOLT TABLE
FRAME LINE 1

LOCATION	QUAN	TYPE	DIA	LENGTH
ER-1/ER-2	8	A325	5/8"	1 3/4"
Cor_Column/Raf	4	A325	1/2"	1 1/4"
EC-2/ER-2	4	A325	5/8"	1 1/4"

MEMBER TABLE
FRAME LINE 1

MARK	PART	LENGTH
EC-1	8F25C13	14'-5 13/16"
EC-2	8F35C12	17'-6"
EC-3	8F25C14	14'-5 13/16"
ER-1	10F35C12	20'-3 1/16"
ER-2	10F35C12	20'-3 1/16"
G-1	8X25Z14	18'-8"
G-2	8X25Z14	18'-11 3/4"
CB-1	1/2" DIA. ROD	25'-10"
CB-2	1/2" DIA. ROD	24'-0"

FLANGE BRACE TABLE
FRAME LINE 1

▽ ID	PART	LENGTH
FB30	L2X2X14G	2'-6"
FB6-1	L2X2X1/8"	2'-6"

CONNECTION PLATES
FRAME LINE 1

☐ ID	MARK/PART
1	SC-5

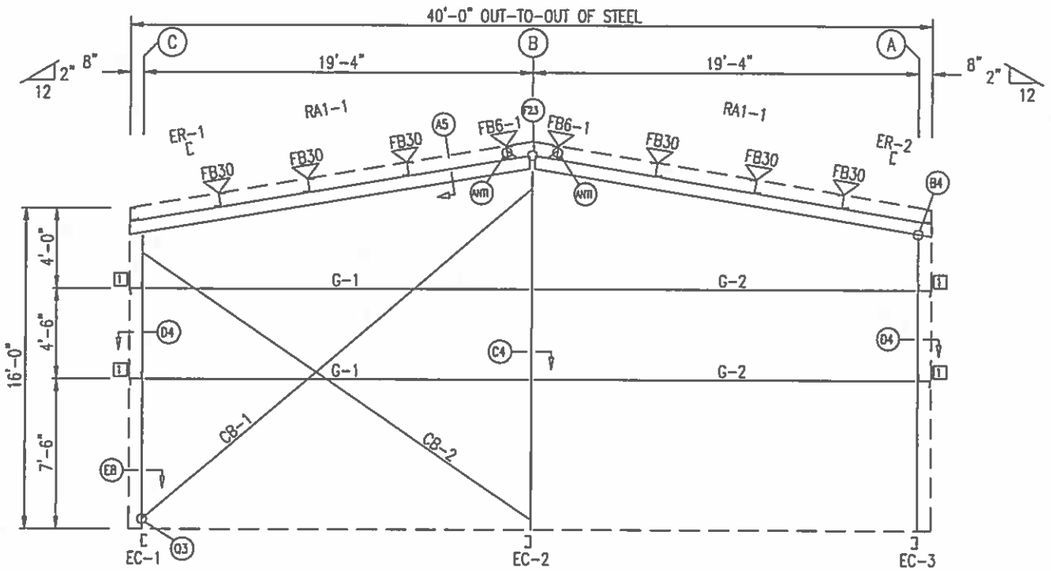

ENDWALL FRAMING: FRAME LINE 1

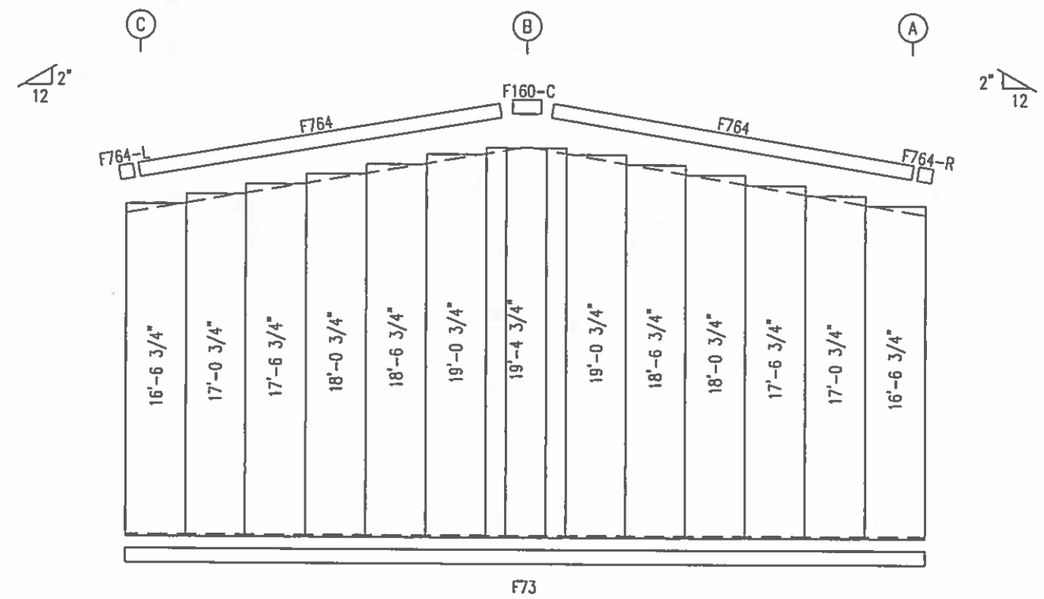

ENDWALL SHEETING & TRIM: FRAME LINE 1

PANELS: 26 Gauge PBR – Polar White

GENERAL NOTES:

1. INSTALL ALL GIRTS AND FLANGE BRACES (FB) AS SHOWN.
2. WALL PANEL PROVIDES STRUCTURAL STABILITY TO THE BUILDING.
3. OTHER THAN FOR WALK DOORS AND WINDOWS SHOWN ON THE CONTRACT, DO NOT ADD ADDITIONAL WALL OPENINGS WITHOUT APPROVAL OF BUILDING MANUFACTURER OR PROFESSIONAL ENGINEER.
4. AFTER INSTALLATION, WIPE ALL PANELS CLEAN OF METAL SHAVINGS CAUSED BY DRILLING.

ISSUE	DATE	DESCRIPTION	BY	CK'D	DSN
A	7/28/17	FOR CONSTRUCTION PERMIT	PNR	PNR	MTR

EMPIRE STEEL BUILDINGS
5230 CARROLL CANYON ROAD,
SAN DIEGO,CALIFORNIA 92121 US.

PROJECT: FILEDBROOK HIGH SCHOOL
CUSTOMER: ATLAS
OWNER: ATLAS
LOCATION: MCKINLEYVILLE, CA 95519

CAD	DATE	SCALE	PHASE	BUILDING ID	JOB NUMBER	SHEET NUMBER	ISSUE
	7/28/17	N.T.S.	1	A	15-B-94950	E5	A

REGISTERED PROFESSIONAL ENGINEER
KOUROSH IRANPOUR
C 045220
EXP. 09/30/18
Aug 01, 2017
CIVIL
STATE OF CALIFORNIA

BEARING FRAME ONLY!
WASHER TO BE USED AT ENDWALL COLUMN TO ENDWALL RAFTER CONNECTION. USE ONE WASHER ON COLUMN SIDE. WASHER NOT NEEDED ON CLIP SIDE.

BOLT TABLE
FRAME LINE 4

LOCATION	QUAN	TYPE	DIA	LENGTH
ER-1/ER-2	8	A325	5/8"	1 3/4"
Car_Column/Rof	4	A325	1/2"	1 1/4"
EC-4/ER-2	4	A325	5/8"	1 1/4"

MEMBER TABLE
FRAME LINE 4

MARK	PART	LENGTH
EC-3	8F25C14	14'-5 13/16"
EC-4	8F35C12	17'-6"
EC-5	8F25C13	14'-5 13/16"
ER-1	10F35C12	20'-3 1/16"
ER-2	10F35C12	20'-3 1/16"
G-1	8X25Z14	18'-8"
G-2	8X25Z14	18'-11 3/4"
CB-1	1/2" DIA. ROD	25'-10"
CB-2	1/2" DIA. ROD	24'-0"

FLANGE BRACE TABLE
FRAME LINE 4

▽ ID	PART	LENGTH
FB30	L2X2X14G	2'-6"
FB6-1	L2X2X1/8"	2'-6"

CONNECTION PLATES
FRAME LINE 4

☐ ID	MARK/PART
1	SC-5

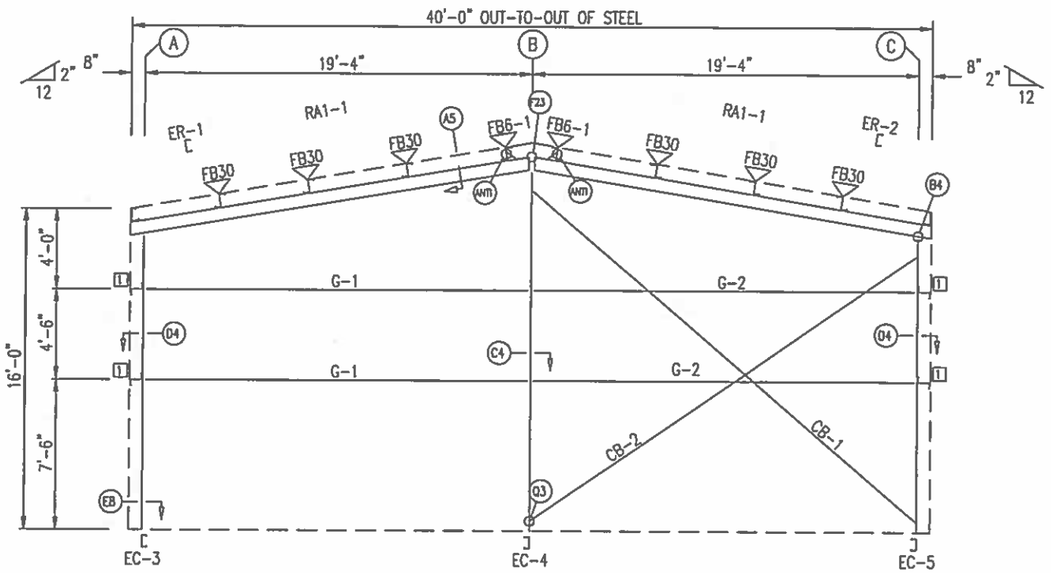

ENDWALL FRAMING: FRAME LINE 4

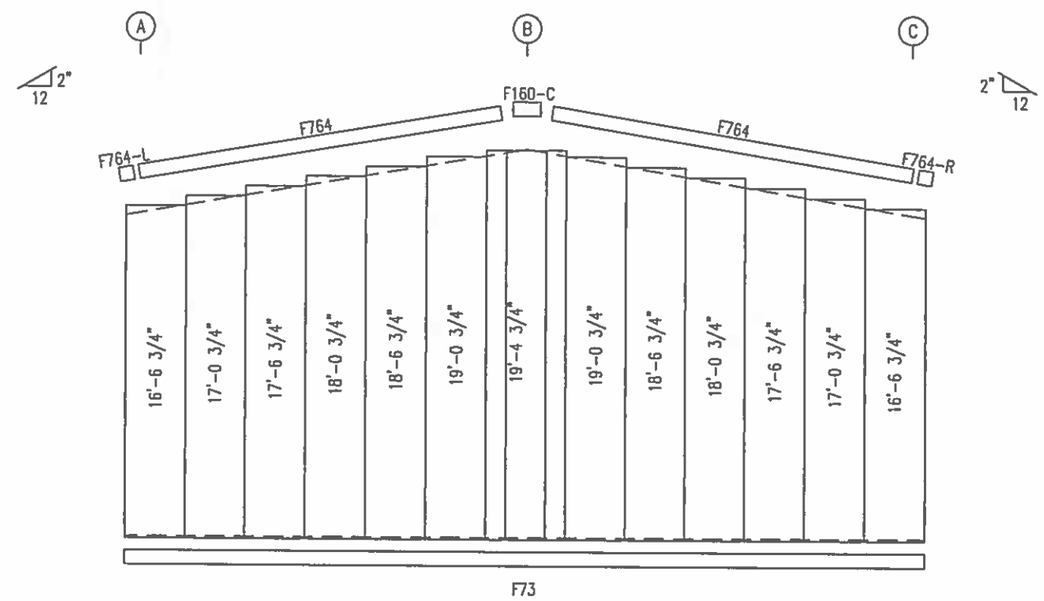

ENDWALL SHEETING & TRIM: FRAME LINE 4

PANELS: 26 Gauge PBR – Polar White

GENERAL NOTES:

1. INSTALL ALL GIRTS AND FLANGE BRACES (FB) AS SHOWN.
2. WALL PANEL PROVIDES STRUCTURAL STABILITY TO THE BUILDING.
3. OTHER THAN FOR WALK DOORS AND WINDOWS SHOWN ON THE CONTRACT, DO NOT ADD ADDITIONAL WALL OPENINGS WITHOUT APPROVAL OF BUILDING MANUFACTURER OR PROFESSIONAL ENGINEER.
4. AFTER INSTALLATION, WIPE ALL PANELS CLEAN OF METAL SHAVINGS CAUSED BY DRILLING.

ISSUE	DATE	DESCRIPTION	BY	CK'D	DSN
A	7/28/17	FOR CONSTRUCTION PERMIT	PNR	PNR	MTR

EMPIRE STEEL BUILDINGS
5230 CARROLL CANYON ROAD,
SAN DIEGO,CALIFORNIA 92121 US.

PROJECT: FILEDBROOK HIGH SCHOOL
CUSTOMER: ATLAS
OWNER: ATLAS
LOCATION: MCKINLEYVILLE, CA 95519

CAD	DATE	SCALE	PHASE	BUILDING ID	JOB NUMBER	SHEET NUMBER	ISSUE
	7/28/17	N.T.S.	1	A	15-B-94950	E6	A

REGISTERED PROFESSIONAL ENGINEER
KOUROSH IRANPOUR
C 045220
EXP. 09/30/18
Aug 01, 2017
CIVIL
STATE OF CALIFORNIA

SPLICE PLATE & BOLT TABLE									
Mark	Qty Top	Bot	Int	Type	Dia	Length	Width	Thick	Length
SP-1	4	4	0	A325	3/4"	2 1/4"	6"	5/8"	1'-7"

STIFFENER TABLE				
Mark	Stiff Mark	Plate Size Width	Thick	Length
RF1-1	St- 1	2 1/2	1/4"	13 15/16
RF1-3	St- 1	2 1/2	1/4"	13 15/16

BASE PLATE TABLE			
Col Mark	Plate Size Width	Thick	Length
BP-1	6"	3/8"	9 1/2"

FLANGE BRACES: BOTH SIDES(UNLESS NOTED)
FBxxA(1): xx=length(in)
A - L2X2X14G

MEMBER TABLE					
Mark	Web Depth Start/End	Web Plate Thick	Web Plate Length	Outside Flange W x Thk x Length	Inside Flange W x Thk x Length
RF1-1	9.0/10.8	0.134	60.0	5 x 1/4" x 184.4	5 x 1/4" x 171.3
	10.8/14.0	0.156	126.8	5 x 1/4" x 22.8	
RF1-2	12.0/12.0	0.134	220.6	5 x 1/4" x 218.6	5 x 1/4" x 218.6
RF1-3	14.0/10.8	0.156	126.8	5 x 1/4" x 22.8	5 x 1/4" x 171.3
	10.8/ 9.0	0.134	60.0	5 x 1/4" x 184.4	

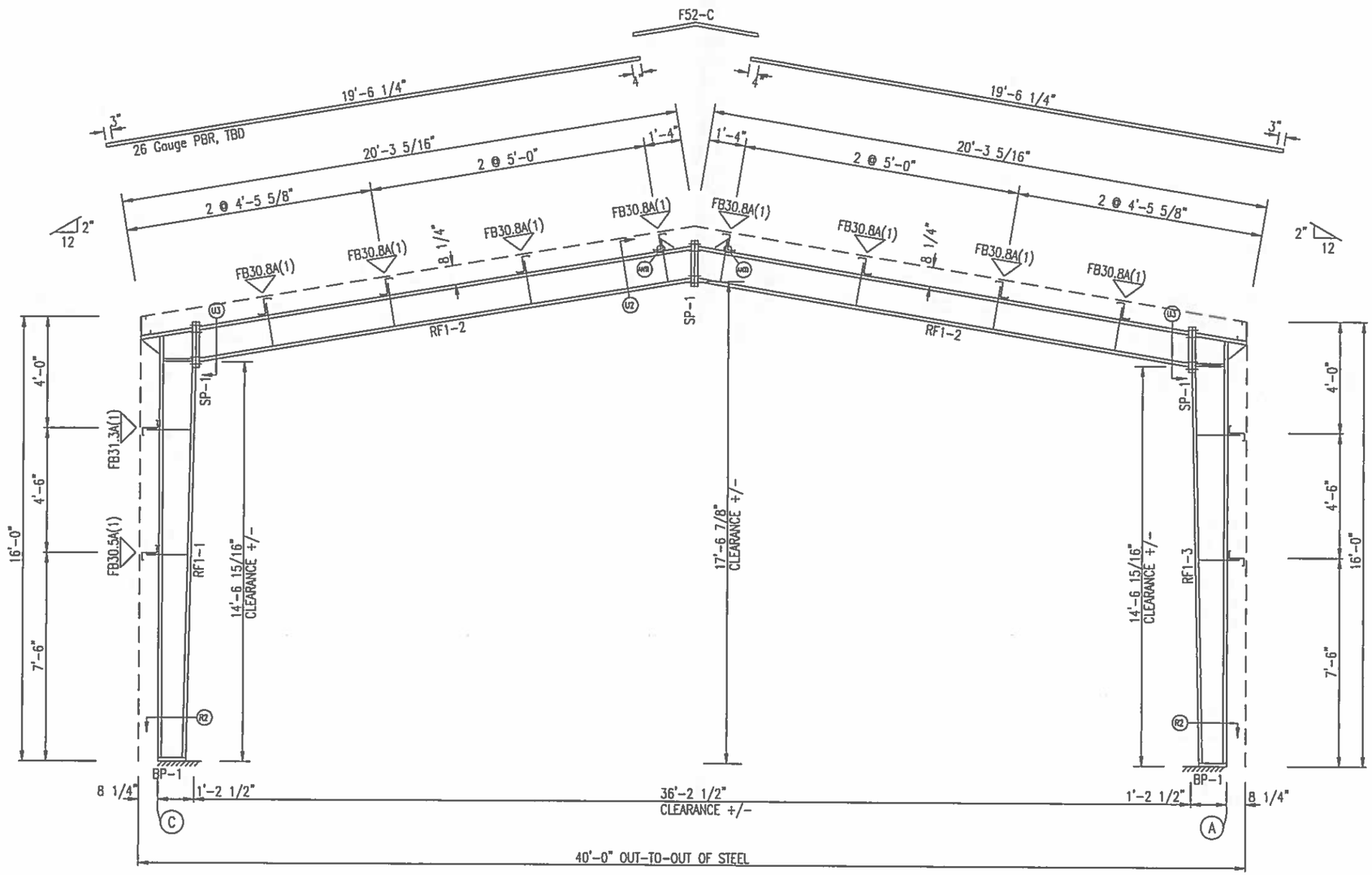

FRAME CROSS SECTION: FRAME LINE 2 3

GENERAL NOTES:

1. ALL BOLTED JOINTS WITH A325M-09 TYPE 1 BOLTS GREATER THAN 1/2" DIAMETER ARE SPECIFIED AS PRETENSIONED JOINTS IN ACCORDANCE WITH THE "SPECIFICATION FOR STRUCTURAL JOINTS USING ASTM A325 OR A490 BOLTS, JUNE 30, 2004". PRETENSIONING CAN BE ACCOMPLISHED BY USING THE TURN-OF-NUT METHOD OF TIGHTENING, CALIBRATED WRENCH, TWIST OFF TYPE TENSION CONTROL BOLTS OR DIRECT TENSION INDICATOR AS ACCEPTABLE TO THE INSPECTING AGENCY AND BUILDING OFFICIAL. INSTALLATION INSPECTION REQUIREMENTS FOR PRE-TENSIONED JOINTS (SPECIFICATION FOR STRUCTURAL JOINTS SECTION 9.2) USING TURN-OF-NUT METHOD IS SUGGESTED. THE CONNECTIONS ON THIS PROJECT ARE NOT SLIP CRITICAL.
2. ALL FIELD CONNECTIONS OF SECONDARY FRAMING SHALL BE BOLTED WITH A325 BOLTS.
3. INSTALL ALL FLANGE BRACES ON COLUMN AND RAFTER AS SHOWN

ISSUE	DATE	DESCRIPTION	BY	CK'D	DSN
A	7/28/17	FOR CONSTRUCTION PERMIT	PNR	PNR	MTR

EMPIRE STEEL BUILDINGS
5230 CARROLL CANYON ROAD,
SAN DIEGO,CALIFORNIA 92121 US.

PROJECT: FILEDBROOK HIGH SCHOOL
CUSTOMER: ATLAS OWNER: ATLAS
LOCATION: MCKINLEYVILLE, CA 95519

CAD	DATE	SCALE	PHASE	BUILDING ID	JOB NUMBER	SHEET NUMBER	ISSUE
	7/28/17	N.T.S.	1	A	15-B-94950	E7	A

REGISTERED PROFESSIONAL ENGINEER
KOUROSH IRANPOUR
C 045220
EXP. 09/30/18
Aug 01, 2017
CIVIL
STATE OF CALIFORNIA

SPLICE PLATES & BOLTS								
Splice Mark	Quan Top/	Bot	-----Bolt----- Type	Dia	Length	Plate Size Width	Thick	Length
SP- 1	4	4	A325	3/4"	2"	6"	5/8"	1'-8 1/4"

STIFFENER TABLE				
Mark	Stiff Mark	·Plate Size· Width	Thick	Length
WF-1	St- 1	2 1/2	1/4"	12"

BASE PLATES			
Col Mark	Plate Size Width	Thick	Length
BP- 1	6"	3/8"	1'-0 1/2"

MEMBER SIZE TABLE (in)						
MARK	LENGTH	WEB DEPTH START/END	WEB PLATE THICK	WEB PLATE LENGTH	OUTSIDE FLANGE W x T x LENGTH	INSIDE FLANGE W x T x LENGTH
WF-1	181.0	12.0/12.0	0.185	15'-1"	6 x 1/4" x 15'-1"	6 x 1/4" x 15'-1"
WF-2	201.5	12.0/12.0	0.185	16'-9 1/2"	6 x 1/4" x 16'-9 1/2"	6 x 1/4" x 16'-9 1/2"

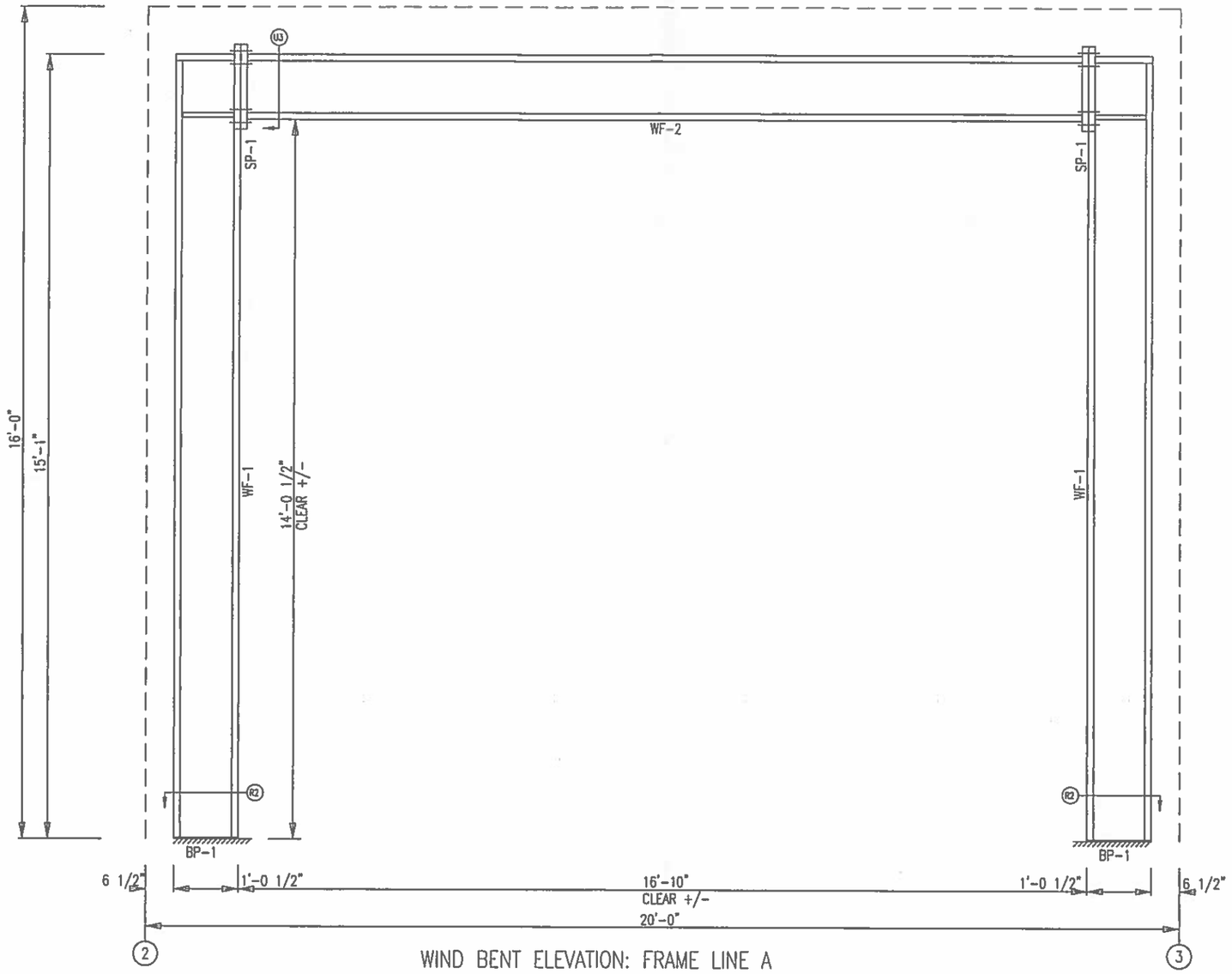

WIND BENT ELEVATION: FRAME LINE A

ISSUE	DATE	DESCRIPTION	BY	CK'D	DSN
A	7/28/17	FOR CONSTRUCTION PERMIT	PNR	PNR	MTR

EMPIRE STEEL BUILDINGS
5230 CARROLL CANYON ROAD,
SAN DIEGO,CALIFORNIA 92121 US.

PROJECT: FILEDBROOK HIGH SCHOOL
CUSTOMER: ATLAS
OWNER: ATLAS
LOCATION: MCKINLEYVILLE, CA 95519

CAD	DATE	SCALE	PHASE	BUILDING ID	JOB NUMBER	SHEET NUMBER	ISSUE
	7/28/17	N.T.S.	1	A	15-B-94950	E8	A

REGISTERED PROFESSIONAL ENGINEER
KOUROSH IRANPOUR
C 045220
EXP. 09/30/18
Aug 01, 2017
CIVIL
STATE OF CALIFORNIA

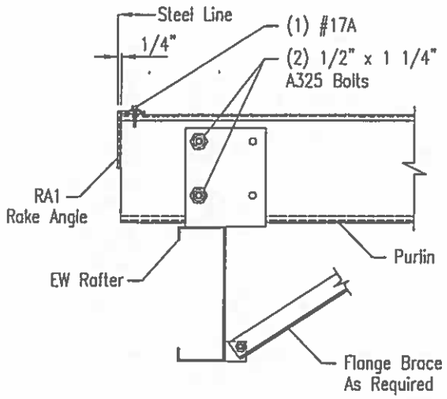

1/2" x 1 1/4" A325 Bolts
(Typ.) (U.N.)

A5 SECTION THRU COLD FORMED RAFTER

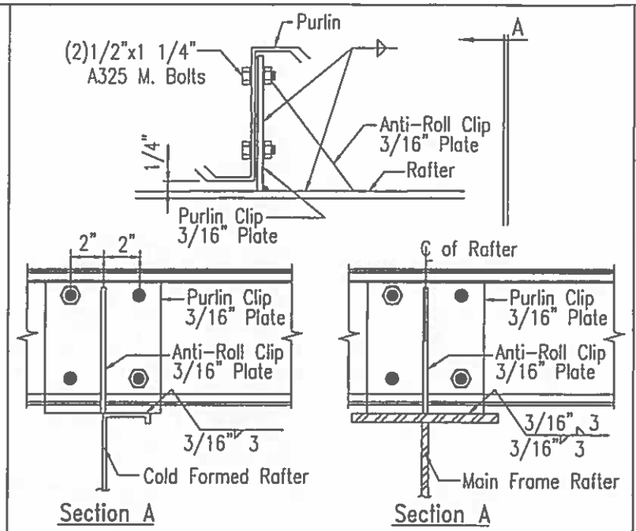

ANTI PURLIN ANTI-ROLL CLIP

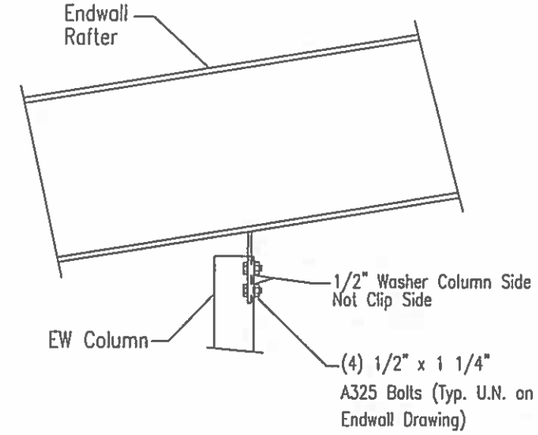

B4 ENDWALL COLUMN TO RAFTER

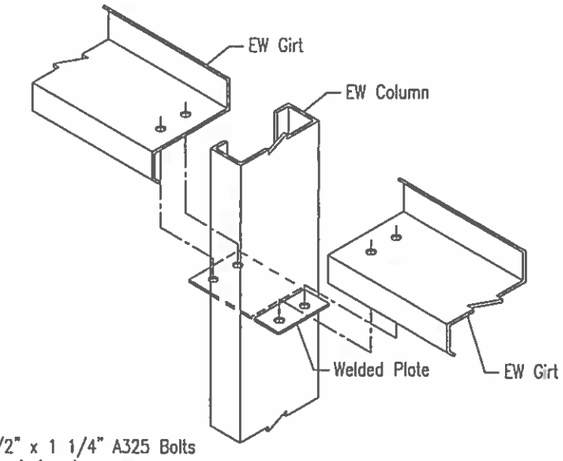

1/2" x 1 1/4" A325 Bolts
(Typ.) (U.N.)

C4 CEE ENDWALL COLUMN TO WALL GIRT

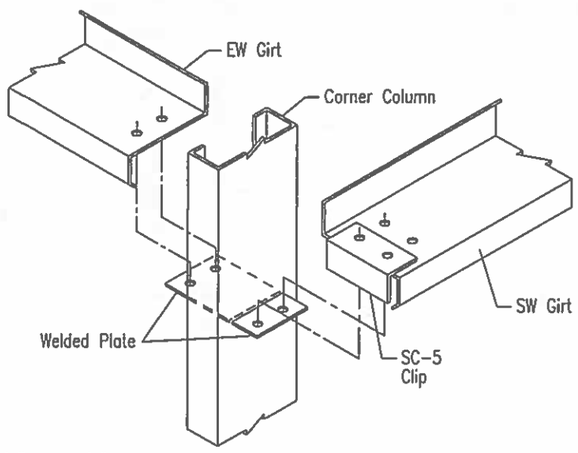

1/2" x 1 1/4" A325 Bolts
(Typ.) (U.N.)

D4 CORNER COLUMN TO WALL GIRT

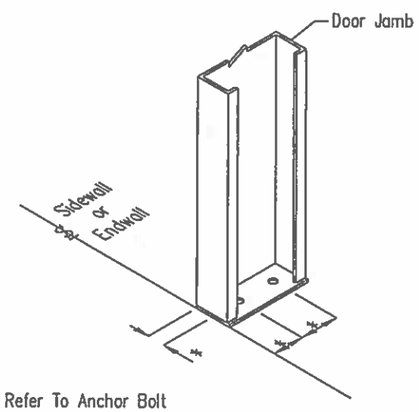

(*) = Refer To Anchor Bolt
Plan

E5 BASE PLATE FOR DOOR JAMB

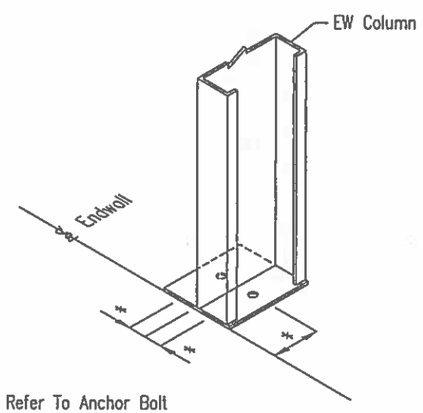

(*) = Refer To Anchor Bolt
Plan

E8 BASE PLATE FOR ENDWALL COLUMN

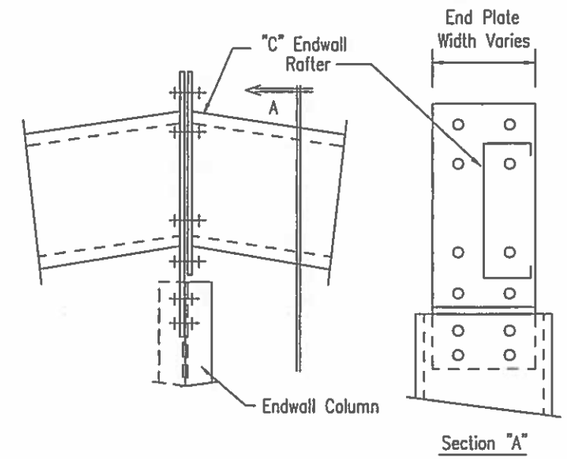

See Endwall Drawing
For Bolt Dia. And Type.

F23 RAFTER SPLICE AT SURFACE CHANGE

ISSUE	DATE	DESCRIPTION	BY	CK'D	DSN
A	7/28/17	FOR CONSTRUCTION PERMIT	PNR	PNR	MTR

EMPIRE STEEL BUILDINGS
5230 CARROLL CANYON ROAD,
SAN DIEGO,CALIFORNIA 92121 US.

PROJECT: FILEDBROOK HIGH SCHOOL
CUSTOMER: ATLAS
OWNER: ATLAS
LOCATION: MCKINLEYVILLE, CA 95519

CAD	DATE	SCALE	PHASE	BUILDING ID	JOB NUMBER	SHEET NUMBER	ISSUE
	7/28/17	N.T.S.	1	A	15-B-94950	DET1	A

REGISTERED PROFESSIONAL ENGINEER
KOUROSH IRANPOUR
C 045220
EXP. 09/30/18
Aug 01, 2017
CIVIL
STATE OF CALIFORNIA

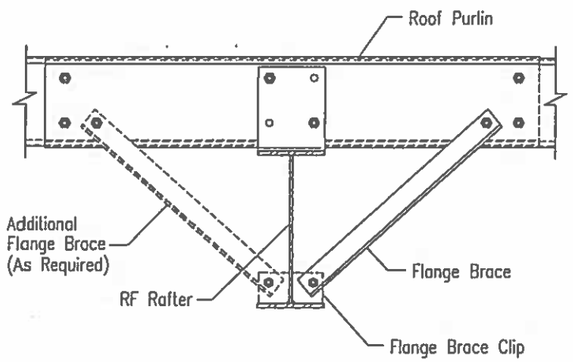

1/2" x 1 1/4" A325 Bolts (Typ.) (U.N.)

G2 ROOF PURLIN TO INTERIOR FRAME RAFTER

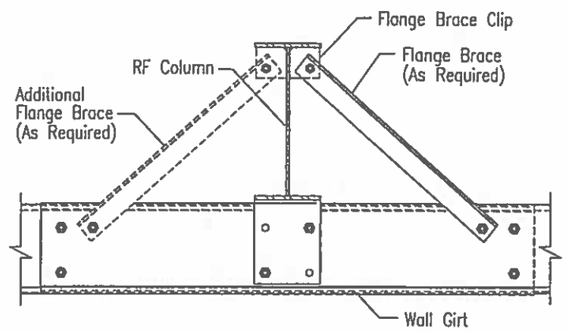

1/2" x 1 1/4" A325 Bolts (Typ.) (U.N.)

H2 WALL GIRT TO RIGID FRAME COLUMN

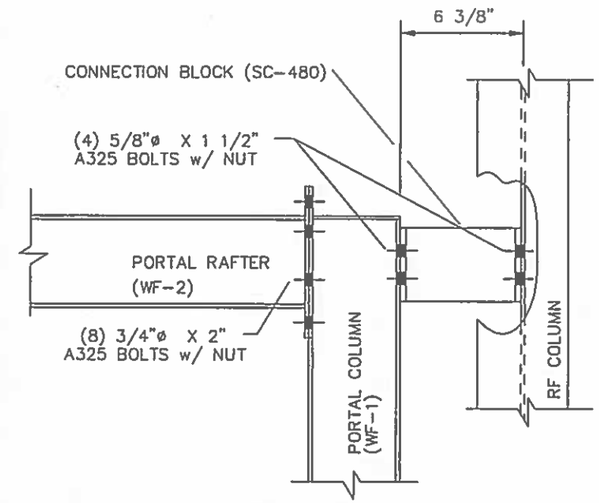

H10 PORTAL FRAME TO BUILDING COLUMN

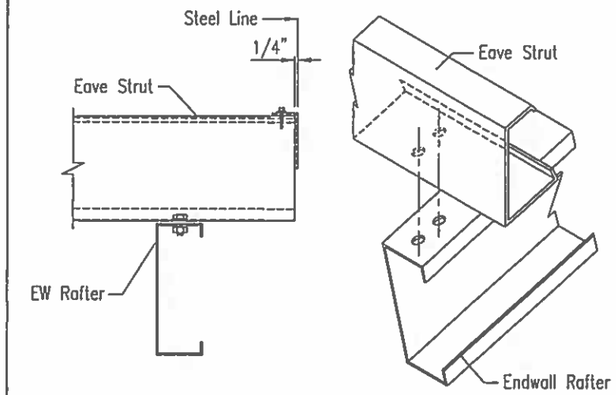

1/2" x 1 1/4" A325 Bolts (Typ.) (U.N.)

I6 LOW SIDE EAVE STRUT TO COLD FORMED RAFTER

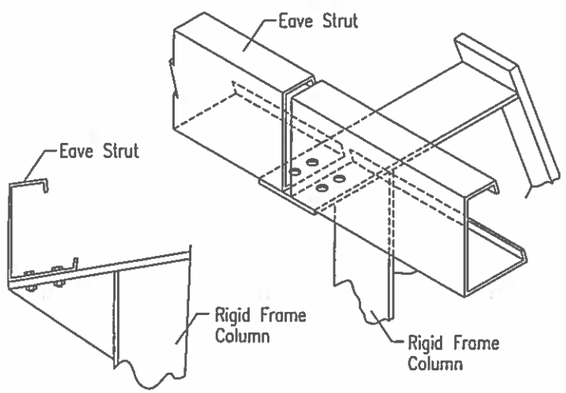

1/2" x 1 1/4" A325 Bolts (Typ.) (U.N.)

J2 EAVE STRUT TO RIGID FRAME

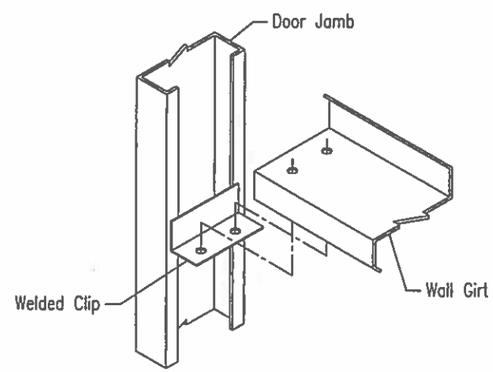

1/2" x 1 1/4" A325 Bolts (Typ.) (U.N.)

K3 WALL GIRT TO DOOR JAMB

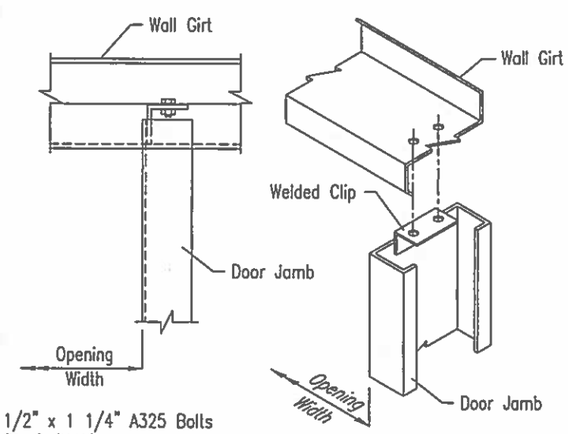

1/2" x 1 1/4" A325 Bolts (Typ.) (U.N.)

L8 DOOR JAMB TO WALL GIRT

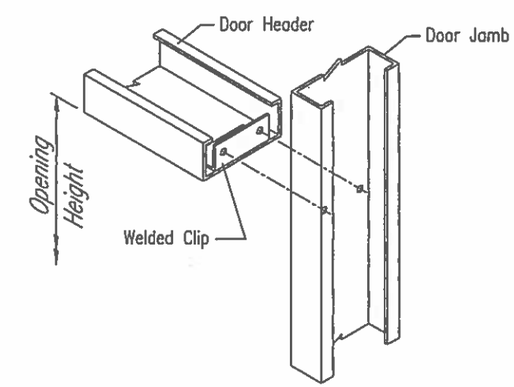

1/2" x 1 1/4" A325 Bolts (Typ.) (U.N.)

M3 DOOR HEADER TO DOOR JAMB

ISSUE	DATE	DESCRIPTION	BY	CK'D	DSN
A	7/28/17	FOR CONSTRUCTION PERMIT	PNR	PNR	MTR

EMPIRE STEEL BUILDINGS
5230 CARROLL CANYON ROAD,
SAN DIEGO,CALIFORNIA 92121 US.

PROJECT: FILEDBROOK HIGH SCHOOL
CUSTOMER: ATLAS | OWNER: ATLAS
LOCATION: MCKINLEYVILLE, CA 95519

CAD	DATE	SCALE	PHASE	BUILDING ID	JOB NUMBER	SHEET NUMBER	ISSUE
	7/28/17	N.T.S.	1	A	15-B-94950	DET2	A

REGISTERED PROFESSIONAL ENGINEER
KOUROSH IRANPOUR
C 045220
EXP. 09/30/18
Aug 01, 2017
CIVIL
STATE OF CALIFORNIA

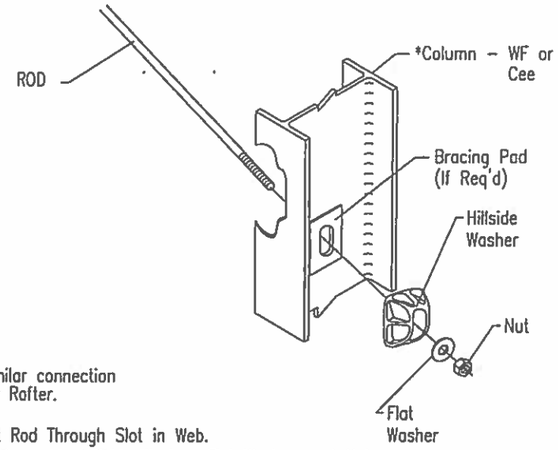

* Similar connection for Rafter.

Insert Rod Through Slot in Web.
Then Assemble Hillside Washer, Flat Washer, and Nut.

Q3 DIAGONAL ROD

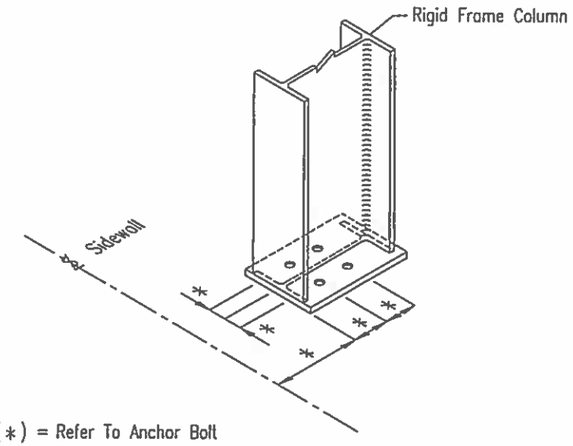

(*) = Refer To Anchor Bolt Plan

R2 ANCHOR BOLTS AT SIDEWALL COLUMNS

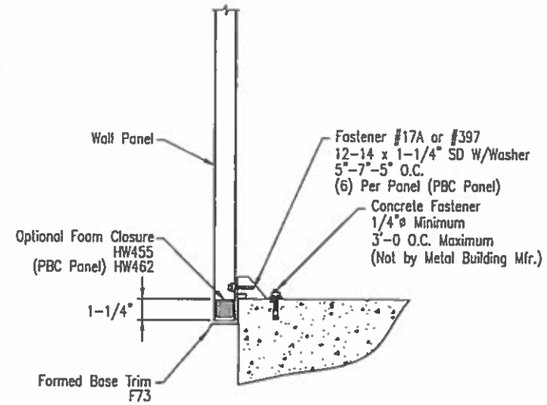

F73 Formed Base Trim Without Panel Recess

TRIM_39

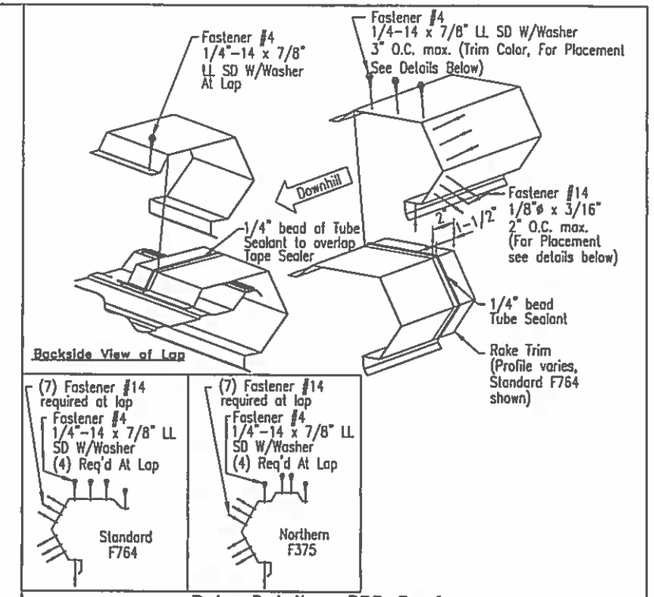

Rake Detail – PBR Roof

Classic Standard and Northern Rake End Lap Installation

TRIM_50

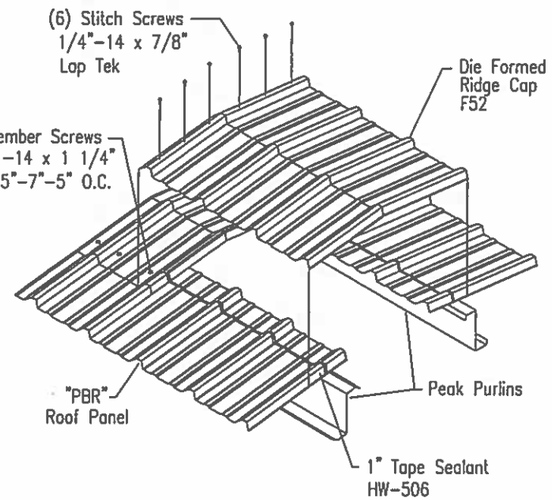

"PBR" ROOF FIXED RIDGE DETAIL

Trim_80

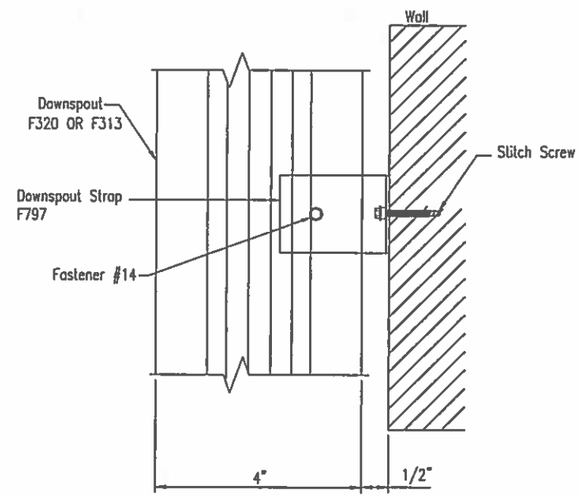

Downspout Strap Attachment Detail

4" x 5" Roll-Form

TRIM_81

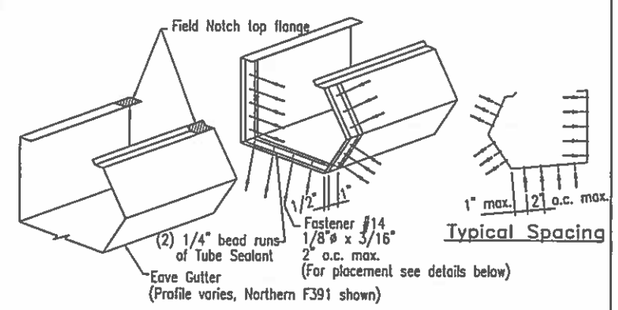

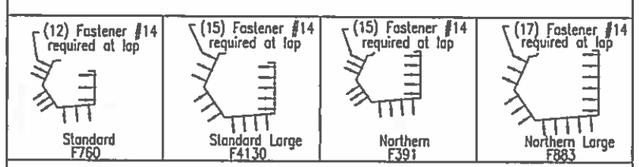

Eave Gutter End Lap Installation – PBR Roof

Classic Trim Profile

TRIM_90

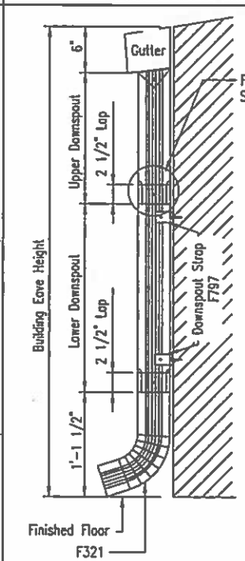

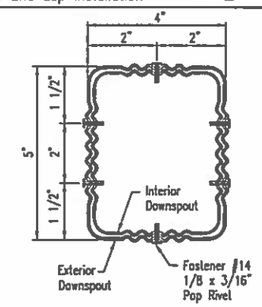

F320 = 10'-6"
F313 = 14'-6"

Field Splice

A field splice is required for eave heights greater than 16'-0".
Cut a 10'-6" or 14'-6" length of downspout. Always measure the required length starting at the swaged end. After cutting to length, insert the swaged end of the cut downspout into the top of the lower downspout. Secure with pop rivets.

4" x 5" Roll Form Downspout

TRIM_96

ISSUE	DATE	DESCRIPTION	BY	CK'D	DSN
A	7/28/17	FOR CONSTRUCTION PERMIT	PNR	PNR	MTR

EMPIRE STEEL BUILDINGS
5230 CARROLL CANYON ROAD,
SAN DIEGO,CALIFORNIA 92121 US.

PROJECT: FILEDBROOK HIGH SCHOOL
CUSTOMER: ATLAS
OWNER: ATLAS
LOCATION: MCKINLEYVILLE, CA 95519

CAD	DATE	SCALE	PHASE	BUILDING ID	JOB NUMBER	SHEET NUMBER	ISSUE
	7/28/17	N.T.S.	1	A	15-B-94950	DET3	A

REGISTERED PROFESSIONAL ENGINEER
KOUROSH IRANPOUR
C 045220
EXP. 09/30/18
Aug 01, 2017
CIVIL
STATE OF CALIFORNIA

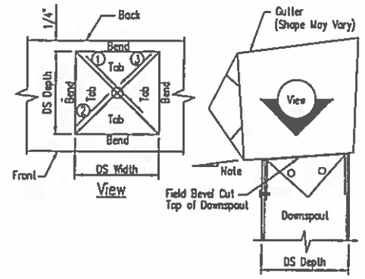

Downspout To Gutter Attachment Detail

1. Refer to the building erection drawings for the location and spacing of the downspouts.
2. Locate all downspouts over a major panel rib if possable.
3. Make a cardboard template of the downspout shape . Place the template on the bottom of the gutter and trace the outline. Remove the template and draw a line from corner to corner, forming an "X" pattern.
4. Drill a whole at the center of the "X". Using tin snips, cut along the lines of the X only. Do not cut along the outside lines of the downspout square.
5. Bend each triangular tab down toward the ground, 90 Degrees to the bottom of the gutter.
6. Position the top of the downspout under the gutter. Make sure all four gutter tabs are on the inside of the downspout.
7. Install Fastener #14 through the downspout into the gutter tab. Only the two sides and the front of the downspout will receive fasteners.

TRIM_98

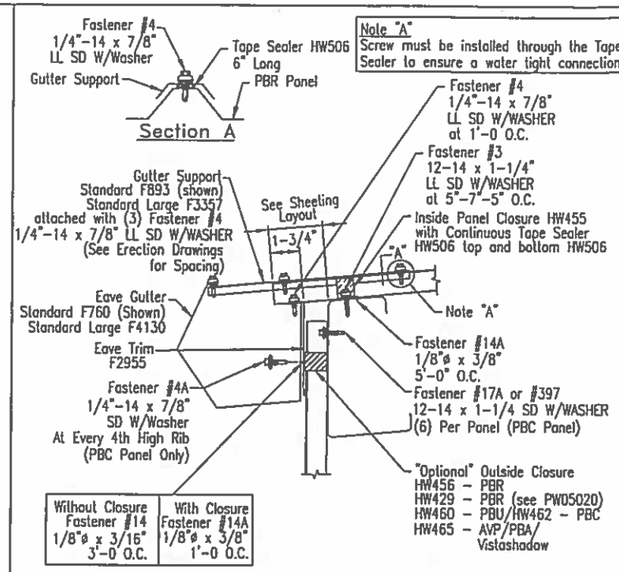

Low Eave Detail – PBR Roof

Classic Standard and Standard Large Gutter – Sheeted Wall TRIM_103

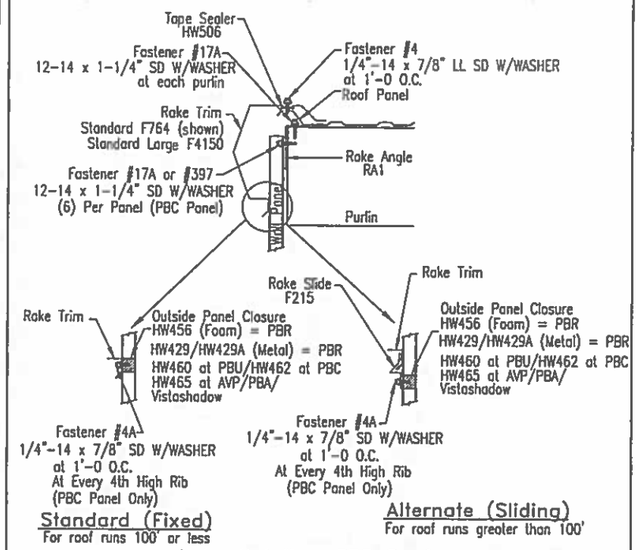

Rake Detail – PBR Roof

Classic Standard and Standard Large Rake Trim – Sheeted Wall TRIM_104

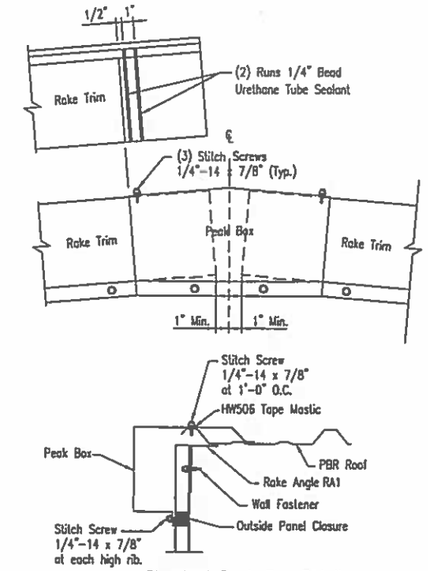

Standard Peak Box Detail

PBR Roof TRIM_106

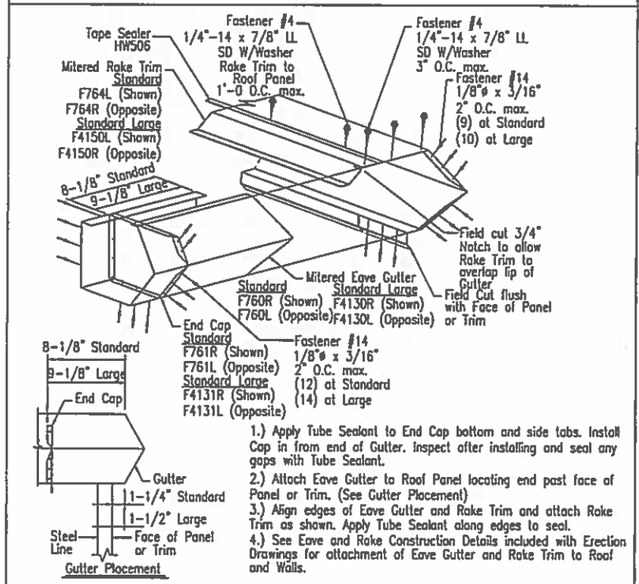

1.) Apply Tube Sealant to End Cap bottom and side tabs. Install Cap in from end of Gutter. Inspect after installing and seal any gaps with Tube Sealant.
2.) Attach Eave Gutter to Roof Panel locating end past face of Panel or Trim. (See Gutter Placement)
3.) Align edges of Eave Gutter and Rake Trim and attach Rake Trim as shown. Apply Tube Sealant along edges to seal.
4.) See Eave and Rake Construction Details included with Erection Drawings for attachment of Eave Gutter and Rake Trim to Roof and Walls.

Low Eave Rake Corner with Eave Gutter

Standard and Standard Large Rake and Gutter TRIM_119

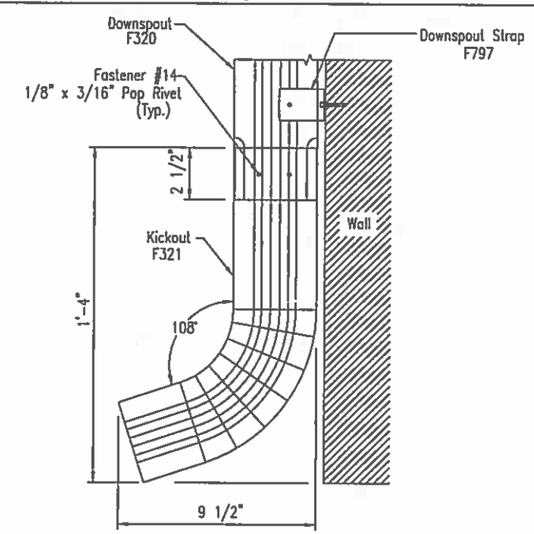

Downspout Kickout

4" x 5" Roll-Form

TRIM_123

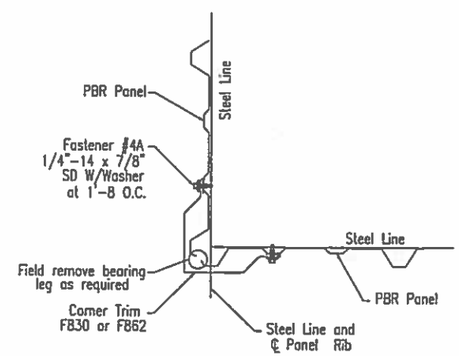

Note:
Standard panel location for Start and End panels is ℄ panel rib at steel line. Refer to erection Drawings for panel location and Corner Trim piece mark.

Outside Corner Trim – PBR Wall Panel

TRIM_186

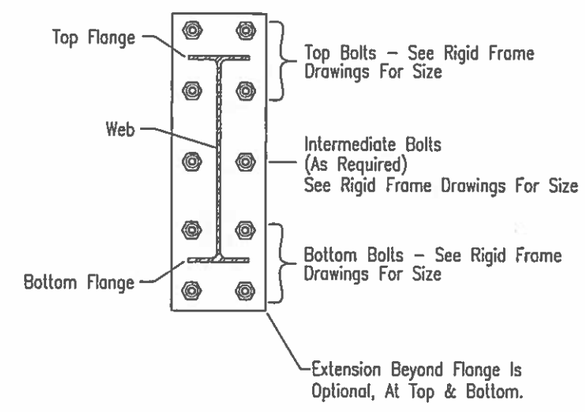

U2 BOLTS FOR RIGID FRAME RAFTER AT BUILDING PEAK

ISSUE	DATE	DESCRIPTION	BY	CK'D	DSN
A	7/28/17	FOR CONSTRUCTION PERMIT	PNR	PNR	MTR

EMPIRE STEEL BUILDINGS
5230 CARROLL CANYON ROAD,
SAN DIEGO,CALIFORNIA 92121 US.

PROJECT: FILEDBROOK HIGH SCHOOL
CUSTOMER: ATLAS OWNER: ATLAS
LOCATION: MCKINLEYVILLE, CA 95519

CAD	DATE	SCALE	PHASE	BUILDING ID	JOB NUMBER	SHEET NUMBER	ISSUE
	7/28/17	N.T.S.	1	A	15-B-94950	DET4	A

REGISTERED PROFESSIONAL ENGINEER
KOUROSH IRANPOUR
C 045220
EXP. 09/30/18
Aug 01, 2017
CIVIL
STATE OF CALIFORNIA

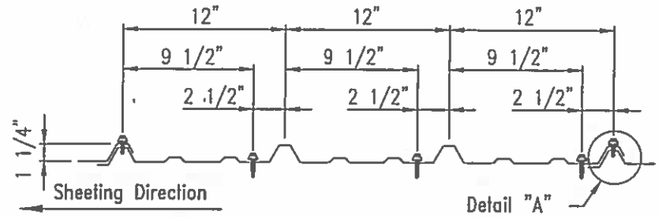

All Roof Members Except As Noted Below

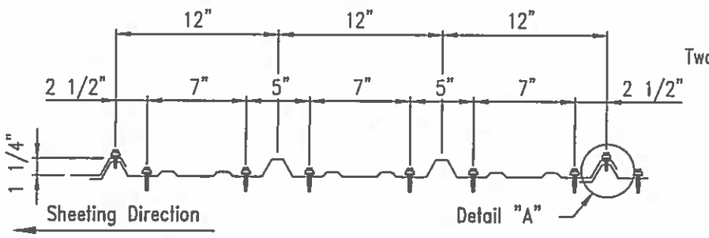

At Eave Strut, Panel End Lap, and Peak Purlin

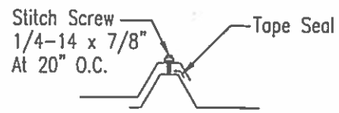

Detail "A"

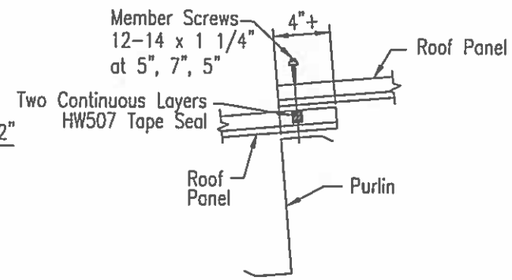

Section Thru Panel End Laps

Fastener Location for "PBR" Roof Panel

TRIM_175

Standard Grade

Description	Fastener Number	Application
1/4"-14 x 7/8"	4A	Stitch & Trim Screw
12-14 x 1 1/4"	17A	Member Screw
12-14 x 1 1/2"	17B	Member Screw
12-14 x 2"	28	Member Screw

Long Life

Description	Fastener Number	Application
1/4"-14 x 7/8"	4	Stitch & Trim Screw
12-14 x 1 1/4"	3	Member Screw
12-14 x 1 1/2"	3A	Member Screw
12-14 x 2"	5B	Member Screw

Note:
Standard details call for 1 1/4" fasteners as member screws by default.
Member screws may be 1 1/4", 1 1/2", or 2" depending on insulation, application, or customer request.

Self-Drilling Screw Application

SCRW1

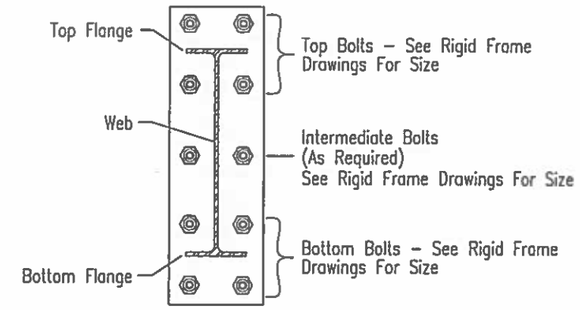

U3 BOLTS FOR RIGID FRAME RAFTER TO COLUMN CONNECTION

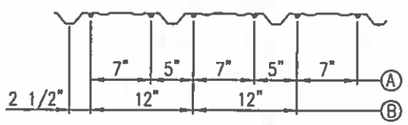

"PBR" Panel

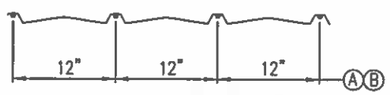

"PBA"/"AVP" Panel

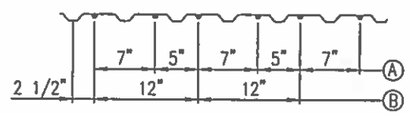

"PBU" Panel

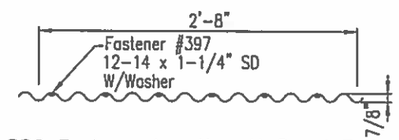

PBC Fastener Location At Panel Ends

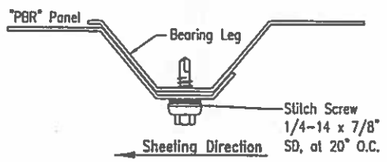

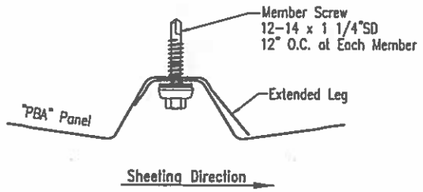

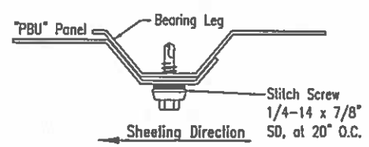

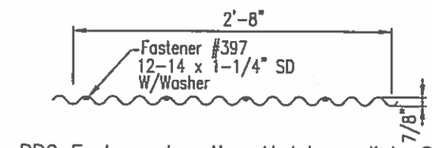

PBC Fastener Location At Intermediate Supports

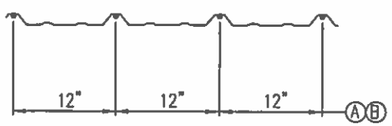

"RVPBR" Panel

Ⓐ = At Base, Rake, Eave, and Mid Span End Laps

Ⓑ = At Intermediate Member, and at Optional Liner Panel

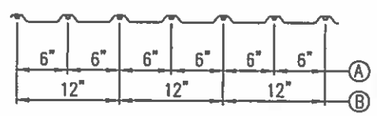

"RVPBU" Panel

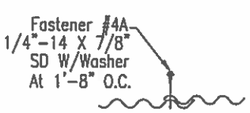

PBC Panel Sidelap

Fastener Location for Panel At Wall

TRIM_174

Formed Base Trim Details — PW02010 — Sep '10 00

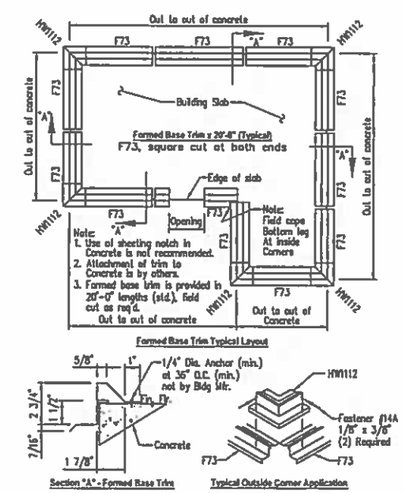

ISSUE	DATE	DESCRIPTION	BY	CK'D	DSN
A	7/28/17	FOR CONSTRUCTION PERMIT	PNR	PNR	MTR

EMPIRE STEEL BUILDINGS
5230 CARROLL CANYON ROAD,
SAN DIEGO,CALIFORNIA 92121 US.

PROJECT: FILEDBROOK HIGH SCHOOL
CUSTOMER: ATLAS — OWNER: ATLAS
LOCATION: MCKINLEYVILLE, CA 95519

CAD	DATE	SCALE	PHASE	BUILDING ID	JOB NUMBER	SHEET NUMBER	ISSUE
	7/28/17	N.T.S.	1	A	15-B-94950	DET5	A

REGISTERED PROFESSIONAL ENGINEER
KOUROSH IRANPOUR
C 045220
EXP. 09/30/18
Aug 01, 2017
CIVIL
STATE OF CALIFORNIA

GUIDANCE ON LTP PLACEMENT

BACKGROUND:

UNDERWRITERS LABRATORY CONSTRUCTION LISTINGS AVAILABLE TO NCI REQUIRE METAL ROOF PANELS AND LTPS TO BE IN AT LEAST A TWO SPAN CONDITION. SINGLE SPAN PANELS ARE NOT ACCEPTABLE. THIS IS ALSO GOOD ENGINEERING PRACTICE AS A SINGLE SPAN PANEL WILL FAIL BY THE SCREWS PULLING THROUGH THE PANEL AT THE EDGES. NONE OF OUR LOAD TABLES ARE BASED ON THIS FAILURE MODE.

THE INTERNATIONAL BUILDING CODE SECTION 2609 PROVIDES RESTRICTIONS ON THE PLACEMENT OF "LIGHT-TRANSMITTING PLASTIC ROOF PANELS" COMMONLY REFERRED TO AS LTPS. THE PURPOSE IS TO LIMIT FIRE EXPOSURE TO ADJACENT BUILDINGS. IF A BUILDING BEING DESIGNED BY NCI IS INTENDED TO BE CLOSER THAN 10' FROM AN ADJACENT BUILDING AND THERE ARE OPENINGS, ALONG THE ADJACENT WALL, THAT ARE REQUIRED TO BE FIRE PROTECTED THEN LTPS ARE NOT PERMITTED WITHIN 6' OF THE EAVE. (IBC06 SECTION 2609.3 AND 704.8) IT IS ALSO GOOD ENGINEER PRACTICE TO NOT PLACE LTPS NEAR THE EAVE OF A BUILDING. SAFETY IS A TOP CONCERN AT NCI. THEREFORE THE STANDARD LTP LOCATION FOR NCI WILL NOT BE CLOSER THAN TWO PURLIN SPANS OR 6' FROM THE EAVE.

THE INTERNATIONAL BUILDING CODE SECTION 2609.2 ALSO STATES THAT THERE SHALL BE A MINIMUM SEPERATION BETWEEN ADJACENT LTPS OF 4'. THIS PROVISION DOES NOT APPLY TO LOW HAZARD BUILDINGS LESS THAN 5000 SQ FT THAT HAVE A MINIMUM FIRE SEPERATION FROM ADJACENT BUILDINGS OF 10'.

FALL PROTECTION:

OSHA REQUIRES SKYLIGHTS BE GUARDED TO PROTECT PEOPLE FROM FALLING THROUGH THEM WITH ONE OF SEVERAL METHODS OF FALL PROTECTION. THESE METHODS ARE OUTLINED IN OSHA 29CFR 1910.23(a)(4) SKYLIGHT SCREENS, 1910.23(e)(8) SLATWORK, 1926.500(b)(4) RAILING, 1926.502(b) GUARDRAIL SYSTEM, (c) SAFETY NET SYSTEMS, (d) PERSONAL FALL ARREST SYSTEMS, (e) POSITIONING DEVICE SYSTEM, (f) WARNING LINE SYSTEM, (g) CONTROL ACCESS ZONE, (h) SAFETY MONITOR, (i) COVERS.

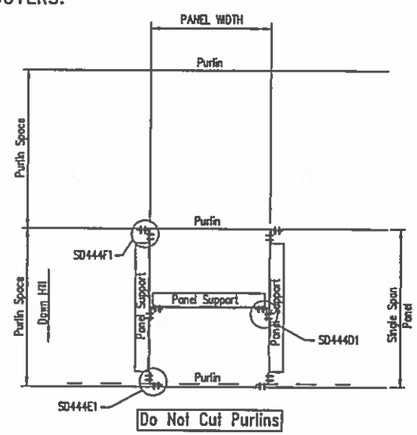

PBR Single Span Panel Support Frame Type "B"

THIS LETTER IS AN UPDATE ON THE LTP PLACEMENT OPTIONS THAT ARE IN COMPLIANCE WITH THE INTERNATIONAL BUILDING CODE, UNDERWRITERS LABRATORY AND GOOD ENGINEERING PRACTICES.

(1) SINGLE SPAN METAL OR LTP PANELS SHOULD NOT BE USED. THE MINIMUM NUMBER OF SPANS FOR ANY PANEL IS TWO. (2) LTPS SHOULD NOT BE PLACED WITHIN 6' OF THE BUILDING EAVE. (3) THERE SHOULD BE 4' OF METAL PANEL SEPARATING ADJACENT LTPS. GIVEN THIS GUIDANCE, THE FOLLOWING TABLE ILLUSTRATES THE MAXIMUM DENSITY OF LTPS FOR VARYING ROOF SPANS WITH A 5' PURLIN SPACING AND TWO SPAN MINIMUM CONDITION. SMALLER PURLIN SPACING CAN BE USED TO OBTAIN THE REQUIRED TWO SPAN CONDITIONS. *SIMPLE SPAN METAL PANELS OR LTPS ARE PERMITTED WITH ADDITIONAL FRAMING WHICH CREATES A TWO SPAN CONDITION. THE ATTATCHED DETAILS ILLUSTRATES THE FRAMING NECESSARY TO CREATE A TWO SPAN CONDITION FOR A SINGLE SPAN PANEL OR LTP.

MAXIMUM LTP DENSITY AND LOCATION FOR VARYING ROOF PLANE WIDTHS (GABLE BUILDING)

BLDG WIDTH	ROOF PLANE WIDTH	PANEL SPANS	PURLIN LOCATION 5	10	15	20	25	30	35	40	45	50
20	10	2	PBR	PBR								
30	15	3	PBR	PBR	LTP*							
40	20	4	PBR	PBR	LTP	LTP						
50	25	5	PBR	PBR	LTP	LTP	PBR*					
60	30	6	PBR	PBR	LTP	LTP	PBR	PBR				
70	35	7	PBR	PBR	LTP	LTP	PBR*	LTP	LTP			
80	40	8	PBR	PBR	LTP	LTP	PBR	PBR	LTP	LTP		
90	45	9	PBR	PBR	LTP	LTP	PBR	PBR	LTP	LTP	PBR*	
100	50	10	PBR	PBR	LTP	LTP	PBR	PBR	LTP	LTP	PBR	PBR

MAXIMUM LTP DENSITY AND LOCATION FOR VARYING ROOF PLANE WIDTHS (SINGLE SLOPE BUILDING)

BLDG WIDTH	ROOF PLANE WIDTH	PANEL SPANS S	PURLIN LOCATION 5	10	15	20	25	30	35	40	45	50
10	10	2	PBR	PBR								
15	15	3	PBR	PBR	PBR							
20	20	4	PBR	PBR	PBR	PBR						
25	25	5	PBR	PBR	LTP*	PBR	PBR*					
30	30	6	PBR	PBR	LTP	LTP	PBR	PBR				
35	35	7	PBR	PBR	LTP	LTP	PBR	PBR	PBR			
40	40	8	PBR	PBR	LTP	LTP	PBR*	LTP*	PBR	PBR		
45	45	9	PBR	PBR	LTP	LTP	PBR*	LTP	LTP	PBR	PBR	
50	50	10	PBR	PBR	LTP	LTP	PBR	PBR	LTP	LTP	PBR	PBR

WALL LTPS ARE NOT SUITABLE FOR ROOF APPLICATIONS. FOR PURLIN SPACING LESS THAN 5', ROOF LTPS MUST BE "FIELD CUT" TO LENGTH (SEE ERECTION DRAWINGS FOR DETAILS). INSULATED PANELS CAN ONLY BE "FACTORY CUT" TO LENGTH.

WARNING: LIGHT TRANSMITTING PANELS (LTP'S) ARE NOT DESIGNED OR INTENDED TO BEAR THE WEIGHT OF ANY PERSON WALKING, STEPPING, STANDING, OR RESTING ON THEM. THE MANUFACTURER DISCLAIMS ANY WARRANTY OR REPRESENTATION, EXPRESSED OR IMPLIED, THAT ANY PERSON CAN SAFELY WALK, STEP, STAND, OR REST ON OR NEAR THESE LIGHT TRANSMITTING PANELS, OR THAT THEY COMPLY WITH OSHA REGULATION.

ISSUE	DATE	DESCRIPTION	BY	CK'D	DSN
A	7/28/17	FOR CONSTRUCTION PERMIT	PNR	PNR	MTR

EMPIRE STEEL BUILDINGS
5230 CARROLL CANYON ROAD,
SAN DIEGO,CALIFORNIA 92121 US.

PROJECT: FILEDBROOK HIGH SCHOOL
CUSTOMER: ATLAS
OWNER: ATLAS
LOCATION: MCKINLEYVILLE, CA 95519

CAD	DATE	SCALE	PHASE	BUILDING ID	JOB NUMBER	SHEET NUMBER	ISSUE
	7/28/17	N.T.S.	1	A	15-B-94950	DET6	A

REGISTERED PROFESSIONAL ENGINEER
KOUROSH IRANPOUR
C 045220
EXP. 09/30/18
Aug 01, 2017
CIVIL
STATE OF CALIFORNIA

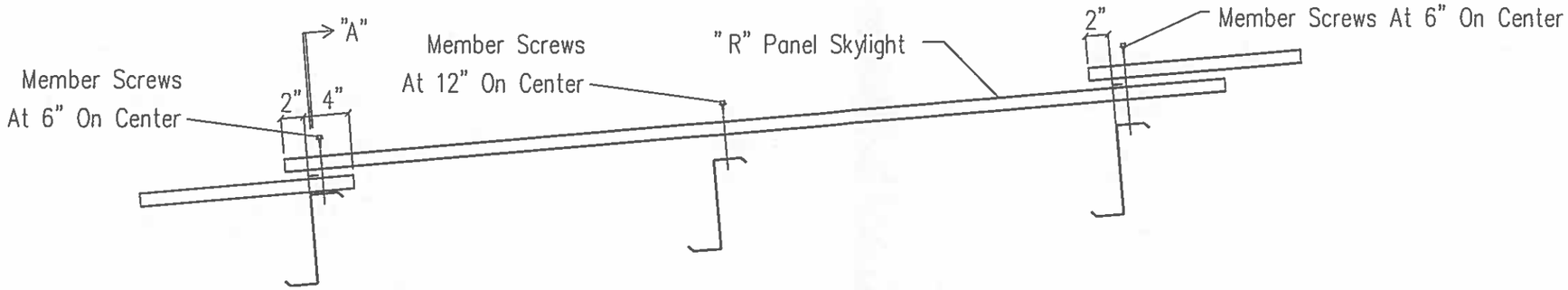

SECTION THRU STANDARD SKYLIGHT ROOF PANEL

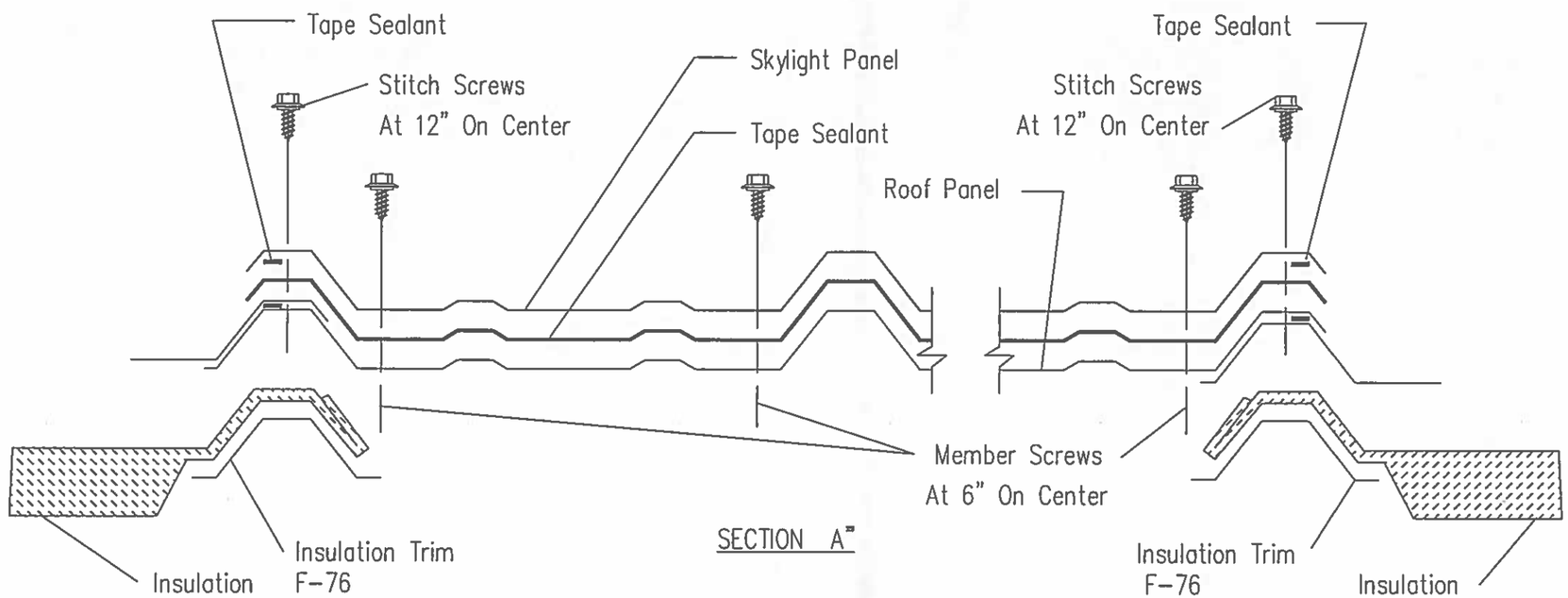

STANDARD SKYLIGHT PANEL INSTALLATION

ISSUE	DATE	DESCRIPTION	BY	CK'D	DSN
A	7/28/17	FOR CONSTRUCTION PERMIT	PNR	PNR	MTR

EMPIRE STEEL BUILDINGS
5230 CARROLL CANYON ROAD,
SAN DIEGO,CALIFORNIA 92121 US.

PROJECT: FILEDBROOK HIGH SCHOOL
CUSTOMER: ATLAS
OWNER: ATLAS
LOCATION: MCKINLEYVILLE, CA 95519

CAD	DATE	SCALE	PHASE	BUILDING ID	JOB NUMBER	SHEET NUMBER	ISSUE
	7/28/17	N.T.S.	1	A	15-B-94950	DET7	A

REGISTERED PROFESSIONAL ENGINEER
KOUROSH IRANPOUR
C 045220
EXP. 09/30/18
Aug 01, 2017
CIVIL
STATE OF CALIFORNIA

PBR Wall Panel - Three Sided Framed Opening
Trim Installation with Field Notch Panel at Head Trim
PW07022

Note: Trim Installation can be done by Field Notch Panel as shown on PW07022 & PW07023 OR with Field Notch and Bend Tabs at Head Trim as shown on PW07024 & PW07025.

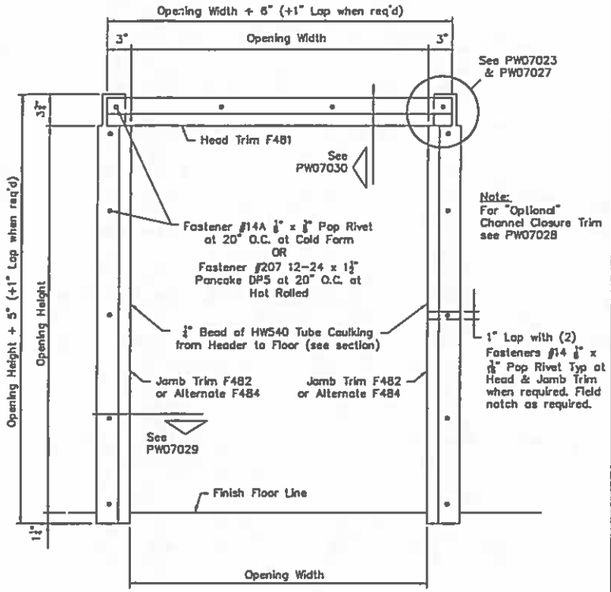

Note: All trim is to be installed BEFORE blanket insulation is applied to walls.

Note: Field measure Opening Width and Height before making field cuts and adjust cut dimensions accordingly.

PBR Wall Panel - Three Sided Framed Opening
Field Notch Panel at Head Trim
PW07023

Note: Trim Installation can be done by Field Notch Panel as shown on PW07022 & PW07023 OR with Field Notch and Bend Tabs at Head Trim as shown on PW07024 & PW07025.

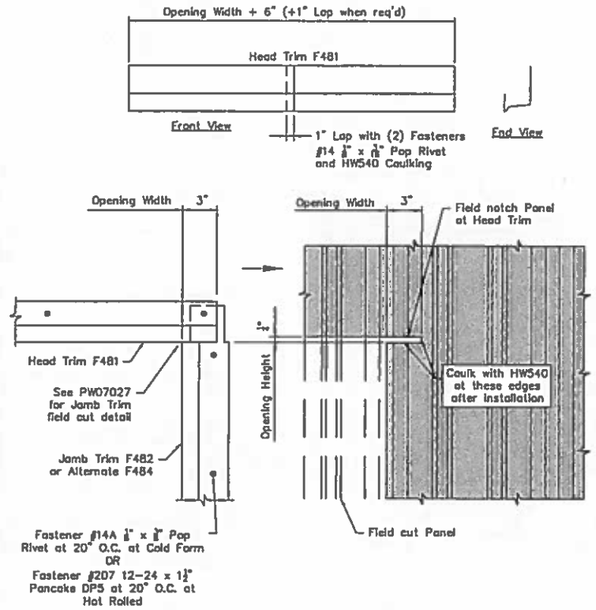

Note: All trim is to be installed BEFORE blanket insulation is applied to walls

Note: Panel position is shown with Panel Rib and Opening on 1'-0 module. Location of Rib may vary depending on the Opening Width and location. Field measure before cutting Panel and Trim.

PBR Wall Panel - Three Sided Framed Opening
Trim Installation with Field Notch and Bend Tabs at Head Trim
PW07024

Note: Trim Installation can be done by Field Notch Panel as shown on PW07022 & PW07023 OR with Field Notch and Bend Tabs at Head Trim as shown on PW07024 & PW07025.

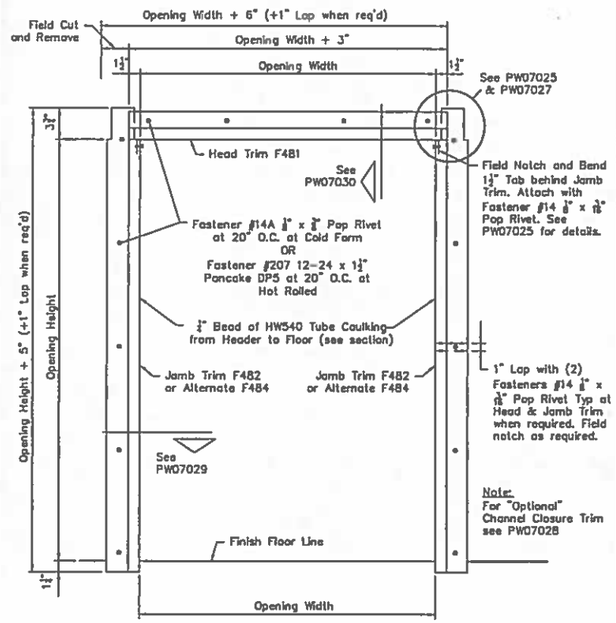

Note: All trim is to be installed BEFORE blanket insulation is applied to walls.

Note: Field measure Opening Width and Height before making field cuts and adjust cut dimensions accordingly.

PBR Wall Panel - Three Sided Framed Opening
Field Notch and Bend Tabs at Head Trim
PW07025

Note: Trim Installation can be done by Field Notch Panel as shown on PW07022 & PW07023 OR with Field Notch and Bend Tabs at Head Trim as shown on PW07024 & PW07025.

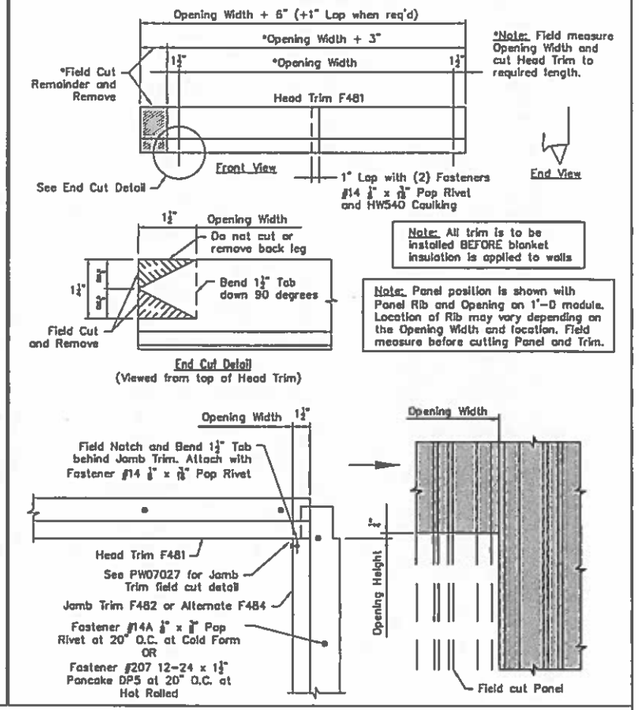

STANDARD FRAMED OPENING DETAILS (PBR WALL PANEL)

ISSUE	DATE	DESCRIPTION	BY	CK'D	DSN
A	7/28/17	FOR CONSTRUCTION PERMIT	PNR	PNR	MTR

EMPIRE STEEL BUILDINGS
5230 CARROLL CANYON ROAD,
SAN DIEGO,CALIFORNIA 92121 US.

PROJECT: FILEDBROOK HIGH SCHOOL
CUSTOMER: ATLAS
OWNER: ATLAS
LOCATION: MCKINLEYVILLE, CA 95519

CAD	DATE	SCALE	PHASE	BUILDING ID	JOB NUMBER	SHEET NUMBER	ISSUE
	7/28/17	N.T.S.	1	A	15-B-94950	DET8	A

REGISTERED PROFESSIONAL ENGINEER
KOUROSH IRANPOUR
C 045220
EXP. 09/30/18
Aug 01, 2017
CIVIL
STATE OF CALIFORNIA

PBR Wall Panel - Three Sided Framed Opening
Jamb Trim Field Cut Details

PW07027

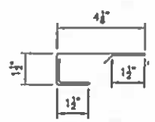

Alternate Jamb Trim F484
Top View

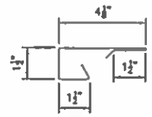

Jamb Trim F482
Top View

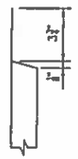

Side View at Head Trim

Side View at Sill Trim

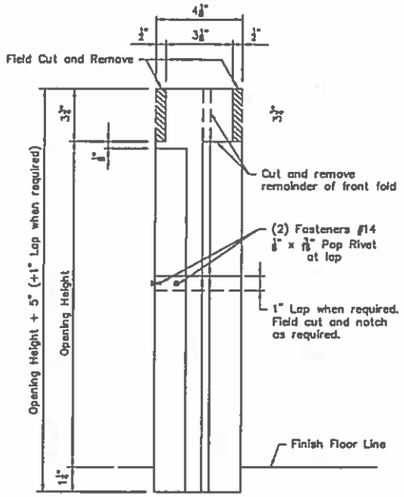

Jamb Trim F482 and
Alternate Jamb Trim F484
Front View
Right Jamb Trim as shown
Left Jamb Trim opposite hand

Note: Field measure Opening Height before making field cuts and adjust cut dimensions accordingly.

PBR Wall Panel - Three Sided Framed Opening
"Optional" Channel Closure Trim

PW07028

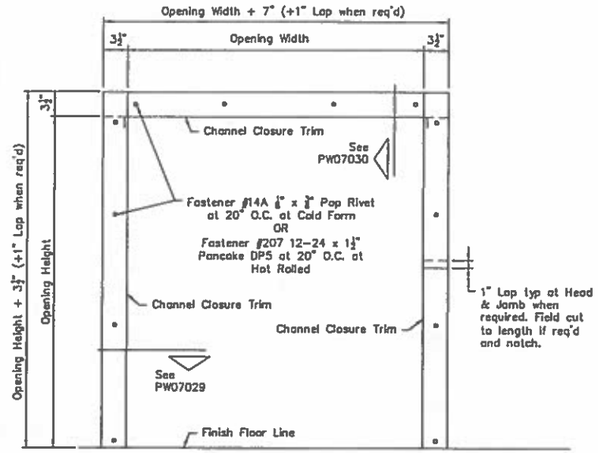

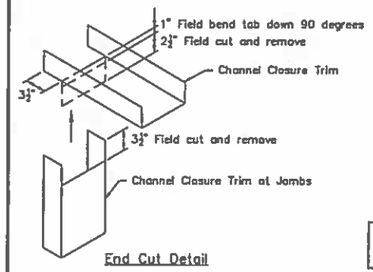

End Cut Detail

Channel Closure Trim Piece Mark

F981	– 8" member
F2994	– 8½" member
F2991	– 8¾" member
F2992	– 8⅞" member
F982	– 10" member
F2993	– 10½" member
F169	– 12" member
F2995	– 12½" member

Note: All trim is to be installed BEFORE blanket insulation is applied to walls.

Note: Field measure Opening Width and Height before making field cuts and adjust cut dimensions accordingly.

PBR Wall Panel - Three Sided Framed Opening
Jamb Trim Installation

PW07029

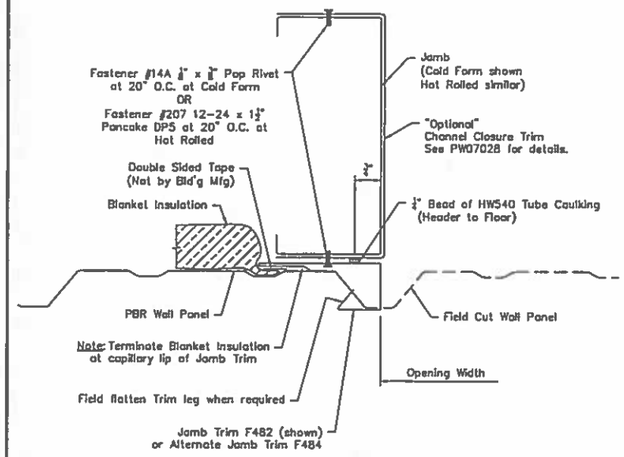

Alternate Jamb Trim F484 Profile

Note: All trim is to be installed BEFORE blanket insulation is applied to walls.

Note: Panel position is shown with Panel Rib and Opening on 1'-0 module. Location of Rib may vary depending on the Opening Width and location. Field measure before cutting Panel and Trim.

PBR Wall Panel - Three Sided Framed Opening
Head Trim Installation

PW07030

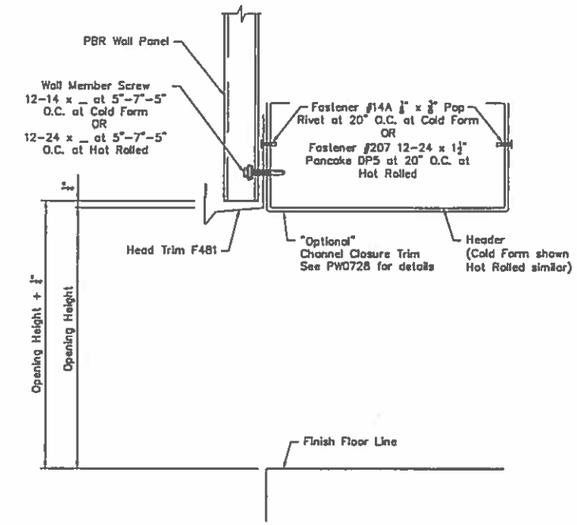

Note: All trim is to be installed BEFORE blanket insulation is applied to walls

STANDARD FRAMED OPENING DETAILS (PBR WALL PANEL)
CONT.

ISSUE	DATE	DESCRIPTION	BY	CK'D	DSN
A	7/28/17	FOR CONSTRUCTION PERMIT	PNR	PNR	MTR

EMPIRE STEEL BUILDINGS
5230 CARROLL CANYON ROAD,
SAN DIEGO,CALIFORNIA 92121 US.

PROJECT: FILEDBROOK HIGH SCHOOL
CUSTOMER: ATLAS
OWNER: ATLAS
LOCATION: MCKINLEYVILLE, CA 95519

CAD	DATE	SCALE	PHASE	BUILDING ID	JOB NUMBER	SHEET NUMBER	ISSUE
	7/28/17	N.T.S.	1	A	15-B-94950	DET9	A
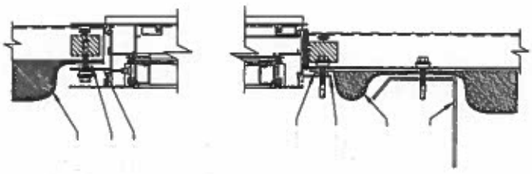
REGISTERED PROFESSIONAL ENGINEER
KOUROSH IRANPOUR
C 045220
EXP. 09/30/18
Aug 01, 2017
CIVIL
STATE OF CALIFORNIA