# Electric Vehicle Charger Selection Guide

STATE OF CALIFORNIA ENERGY COMMISSION

SISKIYOU COUNTY ECONOMIC DEVELOPMENT

CITY OF MT. SHASTA INCORPORATED MAY 31, 1905

Local Government Commission

SCHATZ ENERGY RESEARCH CENTER

REDWOOD COAST ENERGY AUTHORITY

# 1 Background

The Redwood Coast Energy Authority (RCEA) developed this guide as the result of an Electric Vehicle (EV) Readiness Implementation grant funded by the California Energy Commission (CEC). The goal of this guide is to help site hosts and others learn about, evaluate and compare the features of EV charging equipment (available as of November 2016) to assist them in selecting the best charger for their application.

In a prior project, RCEA conducted an Electric Vehicle Charger (EVC) selection process in partnership with the CEC's Alternative and Renewable Fuels and Vehicle Technology Program. The project team identified EV chargers available on the market and developed a rubric to objectively compare cost, performance and design metrics. The team then contacted manufacturers and obtained product information, evaluated criteria, and assessed available EV charger models.

The first section of this guide provides an overview of EVC equipment, how it works, and considerations in making a purchase. The next section includes a table of EVC features available from domestic manufacturers. To gather this information, RCEA sent out specification sheets of predetermined criteria to EVC manufacturers and requested an email response with completed specifications for current 208/240 V charger models. Additional information, including 480 V chargers, was collected using publicly available technical specifications. As funding allows, the table will be updated periodically to include new models and specifications as product offerings evolve.

## 1.1 Selecting an EVC: Making Choices

While there are many different chargers to choose from, answering a few questions about what you need in an EVC can make the decision easier:

1. What type of charging do you want to provide?
2. Do you want a networked charger or a stand-alone charger?
3. Do you wish to charge for access to an EVC? What costs are you willing to incur?

This section will provide some background information to help answer these questions, as well as providing some approximate costs associated with installing EVCs.

There are several names to describe equipment that charges electric vehicles. Most literature uses the term "Electric Vehicle Supply Equipment," or EVSE.

This guide uses "Electric Vehicle Charger," or EVC, as it describes the function more clearly: a device providing power to charge an electric vehicle.

See the end of this guide for a glossary of common electric vehicle charging terms.

## 1.2 Types of EV Charging

Chargers are generally classified in terms of the power they can provide, designated as "levels":

- A Level 1 EVC uses a standard 120 volt outlet, usually taking between 8-20 hours to fully charge a PEV.

- A Level 2 EVC uses a 208/240 volt electric circuit, usually taking 4-8 hours to fully charge a PEV.
- A Level 3 EVC uses a 480 volt electric circuit, usually taking 20 minutes to reach 80% charge. Once at 80% charge, Level 3 chargers reduce power to supply the remaining charge in order to prevent damage to the battery.

The charge times will vary depending on the PEV and the battery capacity. More information is provided in the Glossary section of this guide. The different charging levels serve different consumer needs: fast chargers are best suited for long-distance trips where time is a premium, while slower chargers work best at locations where people will be parked for long periods. The charging pyramid (Figure 1) illustrates charging levels, their typical charge time, and approximate cost.

Chargers are also classified by the kind of connector on the charging cord. There are currently two competing standards: J1772, developed by SAE International, and CHAdeMO, developed by an organization of the same name. The connector inlets can be seen in Figure 2. Tesla also has a proprietary connector for their charging stations, exclusively available to Tesla drivers. In the US, CHAdeMO charging comprises the largest share of Level 3 stations, while J1772 is the main standard for Level 1 and Level 2 charging, with a smaller share of Level 3 charging.

It is important to note that not every car will be able to take advantage of an EVC's full power. While external charging devices are commonly called "chargers" (including in this guide), they merely provide an electric current – the actual "charger" managing energy flow into the battery is inside the electric vehicle, as shown in Figure 2. Different vehicles will have different charging rates depending on the internal charger; some will not support Level 3 charging, and other chargers (particularly in older vehicle models) will have charging rates below the standard Level 2 rate.

## The Charging Pyramid

| Level | Charge Time | Cost to Charge |
|---|---|---|
| L3 | *Travel* 20 min | $$$$ |
| L2/L3 | *Public* 0.5 - 3 hours | $$$ |
| L1/L2 | *Workplace* 4 - 8 hours | $$ |
| L1/L2 | *Residential* 8 - 10 hours | $ |

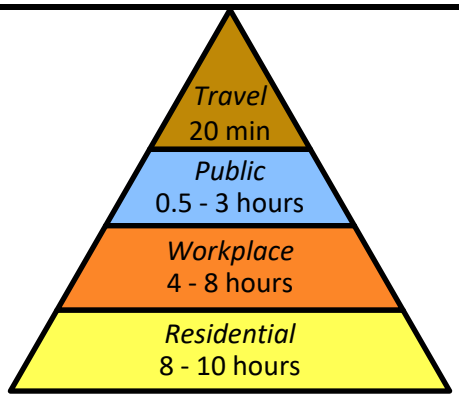

| Level 1 | Level 2 | Level 3 |
|---|---|---|
|  |  |  |
| • 120 Volts, 12-16 A<br>• 2-5 miles of range per hour of charge<br>• Plug in to any standard outlet | • 208/240 Volts, up to 80 Amps<br>• 10-20 miles of range per hour of charge<br>• Typical equipment cost $1,000 - $7,000 | • 208-600 VDC, up to 200 A<br>• 60-80 miles of range per hour of charge<br>• Typical installed cost $20,000 - $100,000 |

Charging pyramid courtesy of: Zero-Emission Vehicles in California: COMMUNITY READINESS GUIDEBOOK, accessible at http://opr.ca.gov/docs/ZEV_Guidebook.pdf. Photo credits for Level 1, Level 2, and Level 3 are P1, P2, and P3, in section 6.1, respectively.

**Figure 1: Comparison of charging levels, time, and typical installation cost**

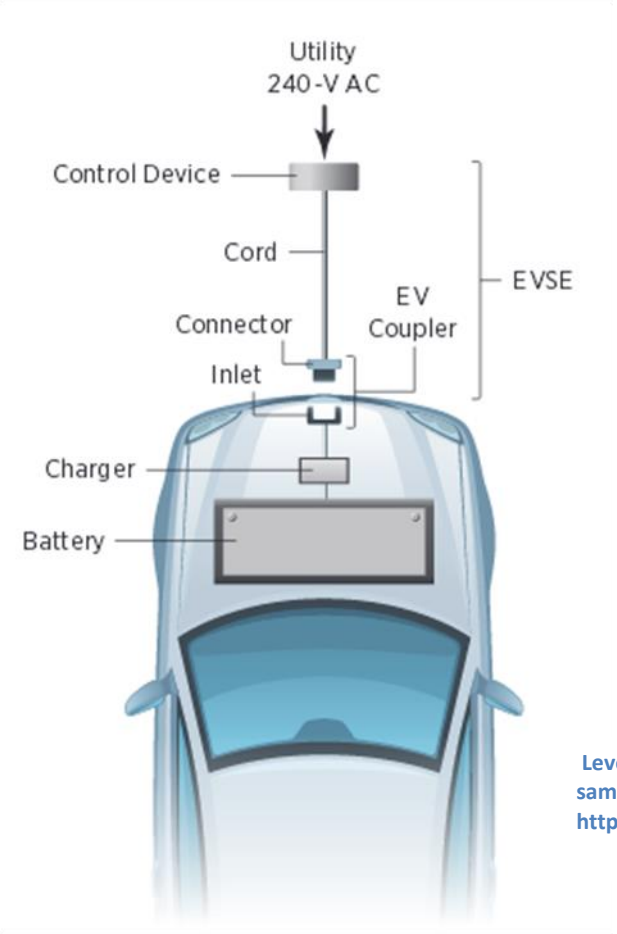


CHAdeMO Level 3 receptacle (left) and Level 1 and Level 2 J1772 standard receptacle (right). Source used with permission from: http://www.afdc.energy.gov/pdfs/51227.pdf

Level 2 charging schematic. In this diagram, EVSE means the same as EVC. Source used with permission from: http://www.afdc.energy.gov/pdfs/51227.pdf

Figure 2: EVC schematic and connector inlet image

One of the largest factors in determining the type of charging to provide is cost. While maintenance and accessory costs can be significant (and will be explored in more detail in Section 1.4), equipment and installation are the largest cost components, and vary the most between different level chargers. Level 2 charging equipment, the most common for public charging, ranges from $1,000 to $7,000, depending on features. Incentives can help reduce the upfront cost; for example, the EV infrastructure tax credit for an EVC in 2016 is 30% up to $1,000 for consumers, and 30% up to $30,000 for businesses. Some states provide EVC and battery-only electric vehicle (BEV) incentives: Oregon has an EVC tax credit for 50% of the project cost up to $750. Other options include credits or incentives for organizations, alternative energy sources, and leased facilities.

Installation costs are highly variable: the type of site host, wiring, number of circuits and EVC units being installed, and trenching are all key factors unique to each installation. The cost for other components, such as EVC parking spot signs and wheel stops, will also vary depending on state requirements and shipping costs. Overall, the installation, maintenance, and equipment costs for a Level 2 station could range from $12,000 - $20,000. With more expensive equipment and more demanding electric service, Level 3 charging stations are typically at least 2-3 times the cost of a Level 2 station.

## 1.3 Stand-Alone vs. Networked Chargers

A service network provides oversight and services to support a system of EVCs. Services are available to EV drivers as well as site hosts or network administrators, with different fee structures aimed at each. The simplest EVCs, frequently referred to as stand-alone or "dumb" chargers, do not have network access – they are essentially electrical outlets with circuitry to enable communication and safe charging with the vehicle, as outlined in Figure 3. Without network access, stand-alone chargers cannot process payment, and are generally reserved for residential or fleet applications.

An EVC network adds a variety of capabilities. For drivers, services may include payment options, station location and availability, and options such as reservations, messaging, and summary reports. Site host services include payment management, customer support, station status, data reporting, and typically access to a network "dashboard".

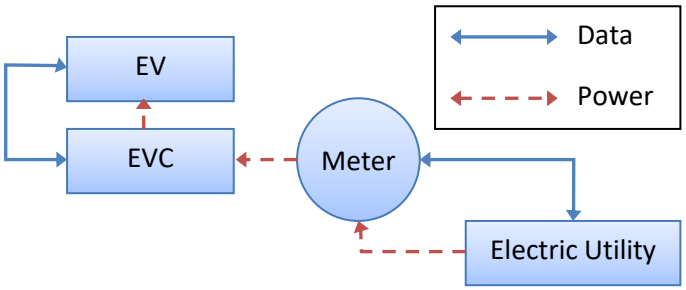


Figure 3: EVC Stand-alone ("dumb-charger") configuration

EVC selection is a balance between the preferred ownership model and realistic availability of services at the desired location. Stand-alone chargers have lower installation costs, simpler designs, and no recurring fees for features such as payment processing and cloud connectivity. They may also be the only viable option in locations with poor cell reception, or at low-use sites where network fees would likely exceed the cost of allowing free access. Conversely, networked EVCs allow for payment options, notification of charging station status, and provide remote diagnostic capabilities.

For those who wish to install a networked charger, service networks generally fall into two categories:

- Subscription access: users subscribe to the service network, which typically establishes an initial deposit and either manual or automatic deposits to keep a payment account active. Users then connect their vehicles and use a dedicated RFID card or smart phone app to initiate a charging session and have fees deducted from their account. These models may include a subscription fee, charging session fees, incremental fee based on the amount of electricity consumed, or some combination of fees.
- Open access: these service networks provide a dedicated subscription, but also accept universal payment methods such as credit cards. **In California, all publically available charging stations must be open access:** California Health and Safety Code Section 44268.2 states that public charging station customers "shall not be required to pay a subscription fee in order to use the station, and shall not be required to obtain membership in any club, association, or organization as a condition of using the station." The specification tables in Section 2 of this guide explicitly state which charging stations are open access.

Networked chargers include several components beyond conventional charging hardware to enable the interchange of money and data, as well as data connections beyond the utility (Figure 4). These additional components/connections include:

- Communication: cell service or Internet connection to provide access to the cloud for data exchange.
- Network administrator: dedicated staff to routinely monitor station status, issue repair requests, track station usage, and maintain onsite hardware and software.
- Manufacturer or Network Service Center: central hub or operations center for all networked charging stations to provide customer support, manage data communication and reporting, monitor station status, and perform remote diagnosis and system updates.
- Transaction processor: Third-party group to manage financial transactions between EVC customers and financial institutions.
- Bank: financial institution that manages customer funds and releases payment for charging sessions and subscription account deposits.

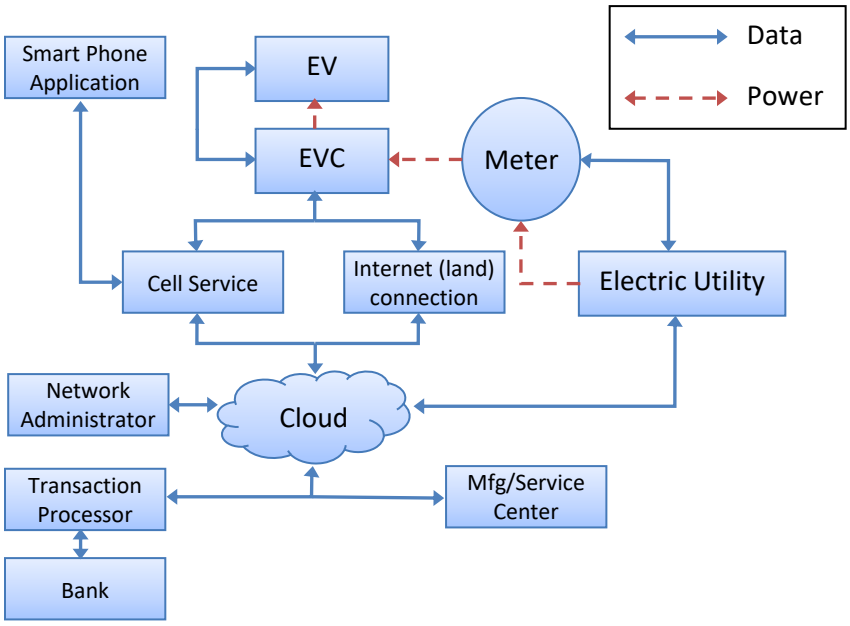


Figure 4: EVC Network with payment capability

Networks also provide a variety of customer dashboards for site hosts to monitor their site and obtain information about station status, usage patterns, revenue, greenhouse gas savings, and other details, as illustrated in Figure 5.

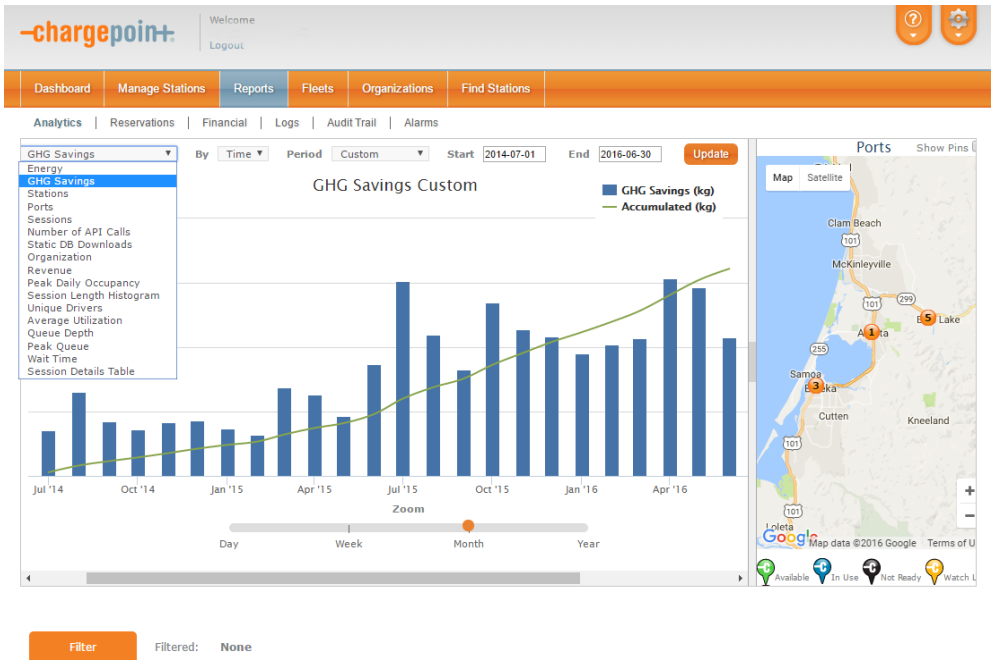


Figure 5: Example of a network dashboard

To reduce inconvenience for drivers, various manufacturers are working to create ways to allow drivers to use a single service to access other "out of network" EVCs. One such system is called the Open Charge Point Protocol (OCPP). When it is fully implemented, it is expected to operate similarly to the way that banks provide access to each other's customers with automatic teller machines (ATMs).

From a site host point of view, unless it is a workplace installation or similar ownership model, a charging station is primarily operated through a network management team and associated software. Most EVCs are connected by default to a service network by manufacturers to support their own diagnostic and customer support requirements. The site offerings and user experience will vary depending on location, cell or network access, and more. There are also cases in which the service network and site host both manage and maintain the charging station network.

## 1.4 Owner and Customer Payment

For many, the most important criterion in selecting an EVC is cost. While the equipment costs are generally straightforward, ongoing operational costs can be more complicated. Depending on the complexity of the network and business model, site owners may face multiple fees for different network components. For example, a location may include a monthly cell service fee, monthly utility meter fee, electric bill, and service network subscription. Some networks may bundle these fees into a per-charging session fee, either as a flat rate or as a portion of the total session cost. While not every charger will have the same fees, any installation will incur some of the costs below:

### Energy price

All chargers will require the station owner to purchase energy. This includes both the per-kWh charge for electricity directly used by the charger, and potential demand charges if the charger increases your peak demand.

*High-cost scenario: The lowest power chargers draw approximately 2 kW of power – unlikely to increase a demand charge, but could potentially use 48 kWh (about 2 full vehicle charges) per day. DC fast chargers require 50 kW of power, potentially using 1200 kWh (about 48 full vehicle charges) and are more likely to incur demand charges.*

### Networking fees

If you wish to purchase a smart charger, most will require subscription fees to access the network. Network subscriptions are typically on an annual or multi-year basis.

*High-cost scenario: While prices will vary depending on the network, typical charges are between $250-300/charging port/year. A bank of 5 dual-port chargers would cost approximately $3,000/ year.*

### Credit card processing fees

While most charger networks include a network-only payment card free of fees, most smart chargers will still accept credit cards (and the subsequent processing fees) in order to be accessible to the largest portion of the market. Some networks will handle all financial transaction for you, paying the processing fees themselves – and generally offsetting the cost in the network fee structure. If the network does not cover processing fees, you will be responsible – such fees are typically a small percentage of the total transaction value.

*High-cost scenario: Profits from charger transactions will be a few percentage points less*

### Maintenance costs

Though actual charger upkeep can be minimal depending on the complexity of the equipment, repairing broken chargers could prove costly if not under warranty. For most, the warranty price will be the majority of the maintenance cost. Warranty pricing will differ based on the equipment and terms of coverage - some provide renewable warranties, others are fixed-term. Some manufacturers will include the warranty price in the equipment cost.

*High-cost scenario: Annual extended warranties for DC fast chargers can cost over $800/charger/year. Less powerful chargers may have a fixed length warranty for half as much, but will leave you responsible for repair charges after the term is over.*

For those looking to generate revenue from an EVC, most networks allow site owners to set their own pricing scales. Pricing is typically based on the amount of energy charged (similar to a utility bill), the time spent using the charger (similar to a parking meter), or as a flat per-charging-session fee. The fee structure you choose will have consequences for the driver. For example, a flat per-session fee will benefit those who can charge the most energy per session – either with longer charge sessions or with

fast charger capability. Time-based fees benefit those who charge at a fast rate. Service networks may also support custom pricing strategies, such as including a time-based "parking meter" rates in addition to the charging fees to encourage people to move their vehicles once charging is complete. Customer payment typically involves using an RFID card obtained through registering with a network, or a credit card.

# 2 EV Charger Specifications

Once you've determined your specific EVC needs, you need to investigate the available options. Based on the EVC selection process finalized by RCEA and the CEC's Alternative and Renewable Fuels and Vehicle Technology Program for a previous grant, the most important criteria to consider are:

1. Theft deterrence features

2. Credit card reader type

3. Commercial maturity

4. Standard warranty length

5. Highest rating (in kW) available per plug

6. Dual plug with high power capability option

Prioritization of equipment features will also differ from site host to site host, and these criteria are not the only important criteria. The specifications table in Section 2.1 of this guide breaks down different categories based on Hardware (electrical and mechanical), Management Software, Payment System, and Manufacturer Information:

- Hardware - Electrical
    - *Number Charging Ports/Type*: The number of EVs that can charge simultaneously, and the connector type (e.g. J1772, CHAdeMO, see Figure 2 for examples).
    - *Input Power*: Power circuit required to support the charger.
    - *Output Power*: Maximum power deliverable to an electric vehicle. Given as a kW rating, and as an estimated miles of range added per hour of charging time.
    - *Cross Vendor Software Compatibility*: Can this charger use other manufacturer's software?
    - *Operating Conditions*: Temperature and humidity operating limits.[1]
- Hardware - Mechanical
    - *Mounting*: Either pedestal or wall.

[1] Not usually an issue outside of extreme climates.

        - *Pedestal*: Hard-wired to a permanent pole or box. Typically mounted on a sidewalk or a concrete base.
        - *Wall*: Either hard-wired or temporarily wired to an existing wall. Typically includes a mounting plate.
    - *Cable*: Cable management strategy (e.g. coil, retractable, etc.).
    - *Number of Charging Ports/Type*: The number of EVs that can charge simultaneously, and the connector type (e.g. J1772, CHAdeMO).
    - *Theft*: Systems available to prevent theft or vandalism.
    - *Power Input Ratings*: Power circuit required to support charger.
    - *Operating Conditions*: Temperature and humidity operating limits.

- Management software:
    - *Network capable*: Can utilize networked management software.
    - *Remote management*: Can charger information and settings be accessed remotely?
    - *Cross Vendor Hardware Compatibility*: Can other chargers use this software?
    - *Network protocol*: Protocol for communication between EVC site host and an EVC network.
    - *Demand Response Capability*: Ability to adjust power output in response to grid demand.
    - *Data reporting*: Available data generated by charger.

- Payment System:
    - *Open Access*: Can any customer charge (yes) or is a service subscription required (no)?
    - *Customer payment*: Possible customer payment methods.
    - *Price Setting Option*: Potential fee structures the owner can set.
    - *Owner payment*: Expected network and maintenance fees paid by station owner.

- Manufacturer/Certification Information:
    - *Listings*: Product testing certifications (e.g. UL, ETL, etc.).
    - *Accessibility Features*: Device features intended to increase access for handicapped users.
    - *First Entry to EVSE Market*: Date of first product the manufacturer released to the EVSE market.
    - *Installation Rating*: Product installation certifications (e.g. NEMA).

## 2.1 EVC Specification Tables

These tables give an overview of the various charging station equipment available as of November, 2016. Exact pricing and warranty will differ depending on the exact submodel and accessories included. While we have made every effort to ensure the information in these tables is accurate, they should not be considered a final authority on EVC specifications. For pricing and other detailed information, contact a sales representative. For images of the chargers, see Section 6.

| Hardware - Electrical | | | | | | | |
|---|---|---|---|---|---|---|---|
| **Manufacturer** | **Model** | **# Charging Ports/Type** | **Input Power** | **Output Power** | | **Cross Vendor Software Compatibility** | **Operating conditions** |
| | | | | **kW** | **miles range / hrs charging** | | |
| ***Level 2 EVC*** | | | | | | | |
| AeroVironment | TurboDock | 1/J1772 | 208/240VAC; 16A | 3.8 kW | 13 miles range/hour | N/A | -40°F to 122°F |
| Blink | PE-30Kice | 1/J1772 | 208/240VAC; 30A | 7.2 kW | 24 miles range/hour | No | -22°F to 122°F |
| BTC Power | Chargion | 1-2/J1772 | 208/240VAC; 16A, 30A, 40A options | 3.3 – 9.6 kW | 11-32 miles range/hour | Greenlots SKY/OCPP compliant | -22°F to 122°F 90% RH non-condensing |
| ChargePoint | CT4000 | 1-2/J1772 | 208/240VAC; 40A circuit | 7.2 kW (max) | 24 miles range/hour | No | -22°F to 122°F 95% RH non-condensing |
| Clipper Creek | LCS / HCS / CS | 1/J1772 | 208/240 VAC | 2.88 – 19.2 kW | 9.6-64 miles range/hour | CS models can use Liberty Plugins control system | Unknown |
| Efacec | Public | 2/J1772 | 208/240 VAC 30 A / each output | 7.2 kW | 24 miles range/hour | Greenlots SKY OCPPv1.2, 1.5 and 1.6 compliant | -13°F to 122°F or -31°F to 122°F |
| EV Box | BusinessLine | 1-2/J1772 | 1- or 3-phase, 230V – 400V, 16A and 32A | 3.7 – 22 kW | 12-73 miles range/hour | Greenlots SKY OCPPv1.2, 1.5 and 1.6 compliant | -22°F to 122°F 95% RH non-condensing |
| EVoCharge | 30A EVoReel EVSE/iEVSE | 1-2/J1772 | 208/240VAC; 40A | 7.2 kW | 24 miles range/hour | Customer can configure with any OCPP network | -22°F to 122°F 95% RH non-condensing |
| EVSE LLC | AutoCoil | 1-2/J1772 | 208/240VAC; 30A | 7.2 kW | 24 miles range/hour | Greenlots SKY/OCPP compliant | -22°F to 122°F 95% RH non-condensing |
| GE | Durastation | 1-2/J1772 | 208/240VAC; 40A | 7.2 kW | 24 miles range/hour | Not Specified | -22°F to 122°F 95% RH non-condensing |
| Juice Bar | Mini Bar | 1-2/J1772, 1-2/120V connections | 208/240VAC; 40A | 7.2 kW | 24 miles range/hour | Uses Greenlots SKY software | -22°F to 122°F |
| Millbank | PowerGen | 1/J1772 | 208/240VAC | 7.2 kW | 24 miles range/hour | N/A | -22°F to 122°F |
| OPConnect | Mark II | 1-2/J1772 | 208/240VAC; 30A per port | 7.2 kW | 24 miles range/hour | Yes | -22°F to 140°F 95% RH non-condensing |
| Schneider | EVlink Level 2 | 1-2/J1772 | 208/240VAC, 40A, 2 Pole Circuit Breaker | 7.2 kW | 24 miles range/hour | Chargepoint network (Level 2)/ Greenlots (DC Fast) | -22°F to 122°F 95% RH non-condensing |

| Hardware – Electrical, continued | | | | | | | |
|---|---|---|---|---|---|---|---|
| **Manufacturer** | **Model** | **# Charging Ports/Type** | **Input Power** | **Output Power** | | **Cross Vendor Software Compatibility** | **Operating conditions** |
| | | | | **kW** | **miles range / hrs charging** | | |
| ***Level 2 EVC*** | | | | | | | |
| SemaConnect | ChargePro™ | 1/J1772 | 208/240VAC; 30A | 7.2 kW | 24 miles range/hour | No | -22°F to 122°F 95% RH non-condensing |
| Shorepower Technologies | ePump | 1-4/J1772 | 240VAC per connection port; up to 30A | 7.2 kW | 24 miles range/hour | Not Specified | -4°F to 140°F |
| Siemens | VersiCharge | 1/J1772 | 208/240VAC; 40A circuit | 1.8 – 7.2 kW | 6-24 miles range/hour | Greenlots SKY OCPPv1.2, 1.5 and 1.6 compliant | -22°F to 122°F 95% RH non-condensing |
| ***Level 3 EVC*** | | | | | | | |
| ChargePoint | CPE200 | 1/CHAdeMO + 1/SAE CCS | 480 VAC, 63A | 50 kW | 167 miles range/hour | No | -35°F to 120°F 95% RH non-condensing |
| EV Box | BusinessLine | 1-2/J1772 | 3-phase, 400V, 32A | 3.7 – 22 kW | 12-73 miles range/hour | Greenlots SKY OCPPv1.2, 1.5 and 1.6 compliant | -22°F to 122°F 95% RH non-condensing |
| Schneider | EVlink DC Fast | 1/CHAdeMO or 1/CHAdeMO + 1/SAE CCS | 480VAC, 79A | 50 kW max | 167 miles range/hour | Chargepoint network (Level 2)/ Greenlots (DC Fast) | -22°F to 122°F 95% RH non-condensing |

* - based on 30 kWh/100 mile fuel efficiency for standard 2016 Nissan Leaf, as reported at www.fueleconomy.gov. Reflects optimal driving conditions.

| Hardware - Mechanical | | | | | | | |
|---|---|---|---|---|---|---|---|
| **Manufacturer** | **Model** | **Mounting** | **Cable Management** | **# Charging Ports/Type** | **Theft Deterrence** | **Power Rating input(s)** | **Operating conditions** |
| ***Level 2 EVC*** | | | | | | | |
| AeroVironment | TuboDock | Wall or Pedestal | Coil Rack | 1/J1772 | Not specified | 208/240VAC; 16A | -40°F to 122°F |
| Blink | PE-30Kice | Wall or Pedestal | Coil Rack | 1/J1772 | Not specified | 208/240VAC; 30A | -22°F to 122°F |
| BTC Power | Chargion | Wall or Pedestal | Coil Rack or Cord Retractor | 1-2/J1772 | Not specified | 208/240VAC; 16A, 30A, 40A options | -22°F to 122°F 90% RH non-condensing |
| ChargePoint (charger by Leviton) | CT4000 | Wall or Pedestal | Cable Hanger | 1-2/J1772 | Locking charger holster | 208/240VAC; 40A circuit | -22°F to 122°F 95% RH non-condensing |
| Clipper Creek | LCS / HCS / CS | Wall or Pedestal | Cable Wrap | 1/J1772 | Lockable connector, HCS allows key-based access | 208/240 VAC | Unknown |
| Efacec | Public | Wall or Pedestal | Coil Rack | 2/J1772 | Bolted to wall or pole mount | 208/240 Vac 30 A / each output | -13°F to 122°F or -31°F to 122°F |
| EV Box | BusinessLine | Wall or Pedestal | Cable Hanger | 1-2/J1772 | Bolted to wall or pole mount | 1-phase, 230V, 16A | -22°F to 122°F 95% RH non-condensing |
| EVoCharge | 30A EVoReel EVSE/iEVSE | Wall or Pedestal | Retractable Reel with auto-rewind & lock features. Wall or Ceiling Mounted. | 1-2/J1772 | Tamper proof mounting fasteners | 208/240VAC; 40A | -22°F to 122°F 95% RH non-condensing |
| EVSE LLC | AutoCoil | Wall or Pedestal | Retractable cable | 1-2/J1772 | Not specified | 208/240VAC; 30A | -22°F to 122°F 95% RH non-condensing |
| GE | Durastation | Pedestal | Coil Rack | 1-2/J1772 | Not specified | 208/240VAC; 40A | -22°F to 122°F 95% RH non-condensing |
| Juice Bar | Mini Bar | Wall or Pedestal | Coil and optional over head cord management system | 1-2/J1772, 1-2/120 V connections | 2 key secure lock for internal components | 208/240VAC; 40A | -22°F to 122°F |
| Millbank | PowerGen | Wall or Pedestal | Cable wrap (wall) or storage (pedestal) | 1/J1772 | Pedestal has lockable component cabinet | 208/240VAC | -22°F to 122°F |
| OPConnect | Mark II | Wall or Pedestal | Coil Rack | 1-2/J1772 | Integrated surveillance camera | 208/240VAC; 30A per port | -22°F to 140°F 95% RH non-condensing |

| Hardware – Mechanical, continued | | | | | | | |
|---|---|---|---|---|---|---|---|
| **Manufacturer** | **Model** | **Mounting** | **Cable Management** | **# Charging Ports/Type** | **Theft Deterrence** | **Power Rating input(s)** | **Operating conditions** |
| ***Level 2 EVC*** | | | | | | | |
| Schneider | EVlink Level 2 | Wall or Pedestal | Coil Rack | 1-2/J1772 | Not specified | 208/240VAC, 40A, 2 Pole Circuit Breaker | -22°F to 122°F 95% RH non-condensing |
| SemaConnect | ChargePro™ | Wall or Pedestal | Coil Rack | 1/J1772 | Not specified | 208/240VAC; 30A | -22°F to 122°F 95% RH non-condensing |
| Shorepower Technologies | ePump | Pedestal | Coil rack | 1-4/J1772 | Overcurrent & GFCI protection; car-to-cord safety detection; locking cord and access doors (optional) | 240VAC per connection port; up to 30A | -4°F to 140°F |
| Siemens | VersiCharge | Pedestal | Cable Wrap | 1/J1772 | Charger locks to pedestal mount | 208/240VAC; 40A circuit | -22°F to 122°F 95% RH non-condensing |
| ***Level 3 EVC*** | | | | | | | |
| ChargePoint | CPE200 | Pedestal | Cable Hanger | 1/CHAdeMO + 1/SAE CCS | Not specified | 480 VAC, 63A | -35°F to 120°F 95% RH non-condensing |
| EV Box | BusinessLine | Wall or Pedestal | Cable Hanger | 1-2/J1772 | Bolted to wall or pole mount | 3-phase, 400V, 32A | -22°F to 122°F 95% RH non-condensing |
| Schneider | EVlink DC Fast | Pedestal | Coil Rack | 1/CHAdeMO or 1/CHAdeMO + 1/SAE CCS | Not specified | 480VAC, 79A | -22°F to 122°F 95% RH non-condensing |

| Management Software | | | | | | | |
|---|---|---|---|---|---|---|---|
| **Manufacturer** | **Model** | **Network-capable** | **Remote Management** | **Cross Vendor Hardware Compatibility** | **Network Protocol** | **Demand response capability** | **Data Reporting** |
| ***Level 2 EVC*** | | | | | | | |
| AeroVironment | TurboDock | No | Yes; Bluetooth enabled | N/A | N/A | N/A | N/A |
| Blink | PE-30Kice | Yes | Yes | No | Proprietary | Yes | Yes |
| BTC Power | Chargion | Yes | Yes | Yes | OCPP | Yes | Yes |
| ChargePoint | CT4000 | Yes | Yes | Yes | 3G GSM, 3G CDMA | Not specified | Included |
| Clipper Creek | LCS / HCS / CS | CS only | CS only | N/A | N/A | N/A | N/A |
| Efacec | Public | Yes | Yes | N/A | OCPP | Yes, automated through OpenADR | Yes |
| EV Box | BusinessLine | Yes | Yes | N/A | OCPP | Yes, automated through OpenADR | Yes |
| EVoCharge | 30A EVoReel EVSE/iEVSE | Yes, not mandatory | Yes via OCPP Network | N/A | OCPP via Cellular or CAT5 | Capable (Optional) | Yes via OCPP Network |
| EVSE LLC | AutoCoil | Yes | Yes | N/A | OCPP | Yes | Yes |
| GE | Durastation | Yes, not mandatory | Yes | Not Specified | Not Specified | Not Specified | Yes |
| Juice Bar | Mini Bar | Yes, not mandatory | Yes | N/A | OCPP | Not specified | Usage data by session |
| Millbank | PowerGen | No | N/A | N/A | N/A | N/A | N/A |
| OPConnect | Mark II | Yes | Yes | Yes | OCPP/ApenADR | Yes | Yes |
| Schneider | EVlink Level 2 | Yes, not mandatory | Yes | N/A | OCPP | Yes | Included |
| SemaConnect | ChargePro™ | Yes, not mandatory | Yes | Not Specified | CDMA or GPRS cellular | Yes | Yes |
| Shorepower Technologies | ePump | Yes, not mandatory | Yes | Yes | OpenADR 2.0b | Yes, OpenADR 2.0b | Energy use data online |
| Siemens | VersiCharge | Yes | Yes | N/A | OCPP | Yes, automated through OpenADR | Yes |
| ***Level 3 EVC*** | | | | | | | |
| ChargePoint | CPE200 | Yes | Yes | Yes | 3G GSM, 3G CDMA | Not specified | Included |
| EV Box | BusinessLine | Yes | Yes | N/A | OCPP | Yes, automated through OpenADR | Yes |
| Schneider | EVlink DC Fast | Yes, not mandatory | Yes | N/A | OCPP | Yes | Included |

| Payment System | | | | | |
|---|---|---|---|---|---|
| **Manufacturer** | **Model** | **Open Access** | **Customer Payment** | **Price Setting Option** | **Owner Payment** |
| ***Level 2 EVC*** | | | | | |
| AeroVironment | TurboDock | Yes | N/A | N/A | N/A |
| Blink | PE-30Kice | Yes | Blink InCard, mobile app, and "800" number | Set by Blink network | Not Specified |
| BTC Power | Chargion | Yes | RFID or credit card | Price by duration, energy, or session. Time-variable pricing available. | Network fees, subscription plans available |
| ChargePoint | CT4000 | Yes | Chargepoint or RFID card, "800" number | Price by duration, energy, or session. Time and user-variable pricing available. | Chargepoint network plan, fees by port. Various subscriptions lengths. |
| Clipper Creek | LCS / HCS / CS | Yes | Requires external device | N/A | CS may require Liberty Plugin subscription |
| Efacec | Public | Yes | RFID, mobile app, and call center | Price by duration, energy, or session. Time and user-variable pricing available. | Hardware maintenance and warranty bundled pricing available |
| EV Box | BusinessLine | Yes | RFID, mobile app, and call center | Price by duration, energy, or session. Time and user-variable pricing available. | Hardware maintenance and warranty bundled pricing available |
| EVoCharge | 30A EVoReel EVSE/iEVSE | Yes | RFID and mobile app, optional magnetic stripe/chip based card, Google Wallet/Apple Pay | Price by duration, energy, or session. Time and user-variable pricing available. | Monthly and annual network options |
| EVSE LLC | AutoCoil | Yes | RFID and mobile app, optional magnetic stripe/chip based card | Price by duration, energy, or session. Time and user-variable pricing available. | Network fees, subscription plans available |
| GE | Durastation | Yes | Credit card, mobile app and PayPal. | Price by duration, energy, or session. Time and user-variable pricing available. | Choice of free network and yearly subscription |
| Juice Bar | Mini Bar | Yes | QR scan, mobile app, and "800" number available 24/7 | Price by duration, energy, or session. Time and user-variable pricing available. | Some network fees, multi-year subscription discounts available |
| Millbank | PowerGen | Yes | N/A | N/A | N/A |
| OPConnect | Mark II | Yes | Major credit cards, OPConnect card, Wright Express Fleet Card®, phone number or email based PIN, mobile app | Flexible | Network fees will vary |
| Schneider | EVlink Level 2 | Yes | RFID, PayPal | Price by duration, energy, or session. Time and user-variable pricing available. | 1, 2, and 3 year subscription plans |

| Payment System, continued | | | | | |
|---|---|---|---|---|---|
| **Manufacturer** | **Model** | **Open Access** | **Customer Payment** | **Price Setting Option** | **Owner Payment** |
| ***Level 2 EVC*** | | | | | |
| SemaConnect | ChargePro™ | Yes | SemaConnect Pass, mobile app, and "800" number | Price by energy or duration. Time and user-variable pricing available. | Monthly network fee, available in multi-year packages |
| Shorepower Technologies | ePump | Yes | Major credit cards, user cards, and RFIDs | Price by duration | Annual network fee, 15% transaction fee |
| Siemens | VersiCharge | Yes | Mobile app and call center | Price by duration, energy, or session. Time and user-variable pricing available. | Hardware maintenance and warranty bundled pricing available |
| ***Level 3 EVC*** | | | | | |
| ChargePoint | CT4000, CPE200 | Yes | Chargepoint or RFID card, "800" number | Price by duration, energy, or session. Time and user-variable pricing available. | Chargepoint network plan; $280/port/year, various subscriptions lengths. |
| EV Box | BusinessLine | Yes | RFID, mobile app, and call center | Price by duration, energy, or session. Time and user-variable pricing available. | Hardware maintenance and warranty bundled pricing available |
| Schneider | EVlink DC Fast | Yes | RFID, PayPal | Price by duration, energy, or session. Time and user-variable pricing available. | 1, 2, and 3 year subscription plans |

| Manufacturer/Certification Information | | | | | |
|---|---|---|---|---|---|
| **Manufacturer** | **Model** | **Listings** | **Accessibility Features** | **First Entry to EVSE Market** | **Installation Rating** |
| ***Level 2 EVC*** | | | | | |
| AeroVironment | TurboDock | UL and cUL | Insertion force: Not listed<br>Control height: 48” | 2011 | NEMA 3R |
| Blink | PE-30Kice | NEC 625, UL and ULc to 2594 | Insertion force: 45N<F<80N<br>Control height: 48” – 60” | 2012 | Outdoor Rated, NEMA 3R |
| BTC Power | Chargion | NEC 625 UL 2231, UL2594 | Insertion force: 45N<F<80N<br>Control height: < 54” | 2013 | NEMA 3R |
| ChargePoint | CT4000 | UL, cUL, NEC Article 625 | Insertion force: Not listed<br>Control height: < 48” | 2009 | Not Specified |
| Clipper Creek | LCS / HCS / CS | UL, cUL, ETL, cETL | Insertion force: 45N<F<80N<br>Control height: Variable | 2006 | NEMA 4R |
| Efacec | Public | UL, SAE 1772 | Insertion force: 45N<F<80N<br>Control height: < 54” | 2011 | Not Specified |
| EV Box | BusinessLine | SAE 1772 | Insertion force: 45N<F<80N<br>Control height: Variable | 2010 | Not Specified |
| EVoCharge | 30A EVoReel EVSE/iEVSE | UL/cUL & ETL/cETL | Insertion force: 45N<F<80N<br>Control height: > 54” | 2009 | Outdoor Rated, NEMA 3R |
| EVSE LLC | AutoCoil | NEC 625, UL 2231&2594, CAN/CSA 22.2 | Insertion force: 45N<F<80N<br>Control height: < 54” | 2009 | NEMA 3R |
| GE | Durastation | NEC 625, UL and cUL, SAE J1772 | Insertion force: 45N<F<80N<br>Control height: < 48” | 2011 | NEMA 3R |
| Juice Bar | Mini Bar | ETL, UL 2231, UL2594, CSA C22.2 No. 280-13 | Insertion force: 45N<F<80N<br>Control height: < 54” | 2009 | Not Specified |
| Millbank | PowerGen | Unknown | Insertion force: Unknown<br>Control height: < 48” | 2011 | NEMA 3R (pedestal) or NEMA 4R (wall mount) |
| OPConnect | Mark II | UL 2594, 2231 | Insertion force: 45N<F<80N<br>Control height: <54” | 2009 | NEMA 3S per 250-1997 |
| Schneider | EVlink | NEC 625, SAE J1772, UL, CSA 22.2 | Insertion force: 45N<F<80N<br>Control height: < 54” | 2011 | NEMA 3R |
| SemaConnect | ChargePro™ | NEC 625 UL 2231, UL2594 | Insertion force: 45N<F<80N<br>Control height: < 54” | 2008 | NEMA 3R |
| Shorepower Technologies | ePump | ETL & ETI | Insertion force: Unknown<br>Control height: < 48” | 2004 | Not Specified |
| Siemens | VersiCharge | UL, SAE J1772, NEC 625 | Insertion force: 45N<F<80N<br>Control height: Variable | 2011 | NEMA 4R |

| Manufacturer/Certification Information, continued | | | | | |
|---|---|---|---|---|---|
| **Manufacturer** | **Model** | **Listings** | **Accessibility Features** | **First Entry to EVSE Market** | **Installation Rating** |
| ***Level 3 EVC*** | | | | | |
| ChargePoint | CPE200 | UL, cUL, NEC Article 625 | Insertion force: 45N<F<80N<br>Control height: < 54” | 2009 | Not Specified |
| EV Box | BusinessLine | SAE 1772 | Insertion force: Unknown<br>Control height: Variable | 2010 | Not Specified |
| Schneider | EVlink | cULus, CHAdeMO, SAEJ1772 (DC Fast) | Insertion force: Unknown<br>Control height: < 54” | 2011 | NEMA 3R |

## 2.2 Manufacturer Information Gaps

We have endeavored to include as many EVC manufacturers and network providers as possible in this guide. When available technical specifications were insufficient, we contacted the manufacturer to request additional information. The following manufacturers have not responded to our requests for information as of January 2017:

- General Electric
- Shorepower Technologies

# 3 Glossary

**# Charging Ports/Type:** The number of cars that can charge simultaneously on a single charger, and the type of connector(s) (e.g. CHAdeMO, J1772) available.

**Accessibility Features:** Charger features to facilitate greater access to potential users. As standards for electric vehicle chargers under the ADA do not extend beyond the height of operable parts, we focus on the operable part (control) height, and the insertion force required to insert a charger connector.

**ADA title 24 2017 compliance (ADA):** Americans with Disabilities Act EVC regulations. New scoping provisions in effect January 2017 ensures requirements such as van and general accessibility dimensions, parking designation, and path of travel are in accordance with the 2016 California Building Code. (2)

**BEV:** Battery-only electric vehicle. A vehicle whose only power source is an onboard battery.

**Cable management:** Method to physically store charging cable, typically a rack for cable coils or a retractable cable device.

**Cable Hangar:** A cable management method that anchors the cable to the charger such that the cable hangs above the ground.

**Cable Wrap:** A cable management method where the charging cord is intended to wrap around the physical charger.

**CAT5:** Common computer networking cable, typically used to connect internet-based devices.

**CEC:** California Energy Commission, a California State agency.

**CHAdeMO:** CHArge de MOve (CHAdeMO). An association as well as the eponymous level 3 EV fast charging process that requires a CHAdeMO charging socket on the EV. This is different from the level 2 SAE J1772 charging sockets common to most public chargers in the US.

**Charging ports:** Number of charging plugs, or ports, per EVC. Multiple ports per station allows for more charging ability with adjacent parking spots. EVCs may be wall-mounted, pedestal, or overhead, supporting different configurations and access. “Dual head” refers to two charging ports per EVC.

**Coil Rack:** A cable management method where a physical rack is provided to coil the cable.

**Commercial maturity:** Hardware or software manufacturer is a major market participant with an established customer base and several product releases. This is a qualitative metric for general consideration and subject to interpretation. The specification tables attempt to capture this with the date of entry into the EVSE market.

**Connector:** PEV input receptacle for charging. Level 1 and Level 2 charging is based the Society of Automotive Engineers (SAE) International standard, or SAE J1772 standard. PEVs equipped with Level 3 charging may use the CHAdeMO connector, developed in coordination with Tokyo Electric Power Company, or the CSS Combo.

**Cross vendor compatibility:** The ability for EVC hardware to operate using networks from a different manufacturer (cross vendor software compatibility) or the ability for network software to operate on hardware produced by a different manufacturer (cross vendor hardware compatibility).

**Customer payment methods (Customer Payment):** Payment and subscription methods for customers. Magnetic strip: located on the back of a credit or debit card and can be swiped through a reader. RFID: Radio Frequency Identification device uses a copper coil antenna and a chip to store small amounts of data that can be accessed by a reader within close proximity using radio waves. Club card: existing EVC manufacturer or network RFID card. Mobile device: smartphone may contain wireless RFID chips, which allows a smartphone or plastic key ring to communicate with nearby devices without a cable.

**Data reporting:** Usage and service data recorded by networked EVSE.

**Demand Charges:** A charge levied by utility companies based upon the customer's maximum power draw during a given period. Typically only applies to large electricity consumers.

**Demand Response Capability:** The ability of EVCs to adjust power output based on local grid demand. Exact implementation will vary, but is typically coordinated between a service network provider and electric utility.

**Energy use and data reporting (Data Reporting):** Method for recording EVC energy usage and data.

**EVC:** Electric vehicle charger. Generally referred to outside of this guide as EVSE.

**EVSE:** Electric vehicle supply equipment. The common literature acronym for electric vehicle chargers.

**First Entry to EVSE Market:** The year in which a manufacturer first released an EVSE product.

**Input Power:** Power input, in voltage and amperage.

**Installation Rating:** Installation certifications. NEMA: National Electrical Manufacturers Association; ratings typically establish durability of outdoor installations.

**J1772:** An electric vehicle charging standard established by SAE International (formerly the Society of Automotive Engineers). Establishes charger connector shape, standard for Level 2 chargers in the US.

**kWh:** kilowatt per hour.

**Level 1:** A charging process using a cord that plugs into a standard 120 volt outlet, usually taking between 8-20 hours to fully charge a PEV with a standard battery capacity.

**Level 2:** A charging process using a 240 volt electric circuit, which usually takes 4-8 hours to fully charge a PEV with a standard battery capacity. Level 2 is the most common type of public charging in California.

**Level 3:** A charging process that uses a 480 volt electric circuit, that will quickly charge a battery to 80% (usually taking 20 minutes for a PEV with a standard battery capacity), before reducing power to Level 2 charge capacity to fully replenish the battery.

**Listings:** Manufacturer certifications by either independent safety certification laboratories (such as UL or ETL) or national standards (such as the National Electric Code [NEC]).

**Manufacturer:** The company responsible for manufacturing the charger or network software described in the specification tables.

**Model:** The specific model of charger examined in the specification tables. For this guide, models have been selected to give a general idea of the capabilities of the chargers produced by that manufacturer.

**Mounting:** The physical mounting for the charger unit, i.e. wall-mounted or pedestal-mounted.

**Network-capable:** An infrastructure system of public EVCs. There are a variety of providers, administrators, and manufacturers who offer services.

**Network protocol:** Protocol for communication between EVC site host and an EVC network, such as the Open Charge Point Protocol (OCPP)

**Network Service:** An infrastructure system of public EVCs. There are a variety of providers, administrators, and manufacturers who offer services.

**OCPP:** Open Charge Point Protocol (OCPP), an international open communication standard. OCPP-compliant hardware and software is designed to function together regardless of manufacturer. (3)

**Open Access:** A charger that can be available for any customer to use, with or without a network subscription

**Operating Conditions:** The temperature and humidity requirements for a charger to operate normally.

**Output Power:** Power output provided to vehicle from the charger.

**Owner Payment:** Payment and subscription methods for site owners/ operators.

**Pedestal:** Pedestal EVCs include a pole, box, or similar structure to provide free-standing installation. These typically are mounted on a sidewalk or small concrete foundation, similar to other street-based utility equipment. Pedestal EVCs are hard-wired.

**PEV:** Plug-in electric vehicle. A vehicle requiring battery electric power to operate that can be externally charged. Both battery-only (BEV) and plug-in hybrid (PHEV) vehicles available.

**PHEV:** Plug-in hybrid electric vehicle. A plug-in electric vehicle that also carries a backup gasoline generator.

**Power rating input(s):** Power input, in voltage and amperage.

**Pricing schedules:** Pricing schedule for EVCs. Variable pricing: site host offers varying price points at different locations or points-of-sale.

**Price Setting Option:** The different price schemes a charger is capable of supporting, i.e. dollars/kWh, dollars/hour, etc.

**Range/Hours:** A measurement of charger power specifying the amount of driving range added per hour of time spent charging.

**RCEA:** Redwood Coast Energy Authority.

**Remote Management Capability:** EVC can be controlled through a device not physically attached to the station. It is important for communication and control, and can be implemented to improve safety and productivity.

**ROEV Compliant:** Meets standards currently in development by Roaming for EV Charging (ROEV) association to allow drivers to access multiple network services with a single account. The association represents ChargePoint, Blink, and NRG EVgo networks and works with Nissan, BMW, Audi, and Honda. (4)

**SAE CCS:** Society of Automotive Engineers Combined Charging System. It is a fast charging method for EVs delivering high-voltage current via a specific combination plug. The plug socket is an AC connector with a DC option.

**Session fees:** EVC charging fees for customer. Typically determined by site host. Important to consider surcharges and commissions.

**Theft Deterrence:** Features to prevent EVC theft and vandalism.

# 4 References


1. California Energy Commission. (2015) *Agreement ARV-14-046*. http://www.energy.ca.gov/business_meetings/2015_packets/2015-04-08/Item_09f_ARV-14-046_Redwood_Coast_Energy_Authority.pdf. Accessed October 31, 2016.
2. Corelis, Dennis J. (2016). *Access California: New Regulations for Electric Vehicle Charging Stations*. Presentation of behalf of Division of the State Architect, archived by Electric Vehicle Charging Association. www.evassociation.org/uploads/5/8/0/5/58052251/EVC_update_30_march_2016_epri_presentation.pptx. Accessed October 31, 2016.
3. Open Charge Alliance. (2016). *Open Charge Alliance Factsheet*. http://www.openchargealliance.org/uploads/files/Factsheet_OCPP_1.6_2016.pdf. Accessed October 31, 2016.
4. Roaming for EV Charging (ROEV). (2016). *How Public EV Charging Works*. http://roev.org/How-It-Works/Overview. Accessed October 31, 2016.


# 5 Acknowledgments


This guide was made possible through the generous support of many organizations. Funding was provided by California Energy Commission grants CEC-ARV-14-046 and CEC-ARV-14-058, as well as financial support from the City of Mount Shasta and the Siskiyou County Economic Development Council. Without hard work from the following representatives of the Redwood Coast Energy Authority, the Schatz Energy Research Center, the Local Government Commission/Civic Spark, and the Siskiyou County Economic Development Council, this guide would not exist:

Redwood Cost Energy Authority:

- Dana Boudreau
- Pierce Schwalb
- Lori Biondini
- Allison Campbell
- Lexie Fischer
- Matthew Marshall
- Ben Winker

Schatz Energy Research Center

- Jerome Carman
- Andrew Harris
- Greg Chapman
- Kristen Radecsky

Local Government Commission/Civic Spark

- Amanda Le

Siskiyou County Economic Development Council

- Logan Smith

# 6 Product Photos

This section shows the general appearance of some of the EVC models described in this guide.

| | | | | |
|---|---|---|---|---|
| AeroVironment TurboDock (P4)  | Blink, single port (P5)  | BTC Power Chargion EVP, single port (P6)  | BTC Power Chargion EVP, dual port (P7)  | ChargePoint CT 4000 (P8P8)  |
| ChargePoint CPE200 (P9P9)  | ClipperCreek LCS (P10)  | ClipperCreek HCS (P11)  | ClipperCreek CS (P12)  | Efacec Public Charger (P13)  |
| EV Box Business (P14)  | EVSE LLC AutoCoil (P15)  | EvoCharge, EVoReel (P16)  | EVoCharge, single port (P17)  | EVoCharge, dual port (P17)  |

| | | | | |
|---|---|---|---|---|
| GE DuraStation Double Pedestal (P18)  | JuiceBar LLC, Minibar double port (P19)   | Millbank PowerGen (P20)  | OPConnect Mark II (P21)  | Schneider EV Link Level 2 (P22)  |
| Schneider EV Link DC Fast (P23)  | SemaConnect ChargePro (P24)  | Shorepower Technologies, ePump (P25)  | Siemens VersiCharger (P26)  | |

Stations not to scale: please see manufacturing specifications for physical dimensions. Image credits are given in section 6.1. Current models may vary from those shown here.

## 6.1 Photo credits

P1. PCS-15 by ClipperCreek. https://store.clippercreek.com/level1/pcs-15-portable-ev-charging-station.

P2. Image by Chargepoint. http://strattonreport.com/news/chargepoint-invest-20-million-national-network-high-speed-ev-chargers/.

P3. Prototype image by Aerovironment. http://www.evsolutions.com/Upload/Product/635652532473270000.pdf.

P4. TuboDock, by AeroVironment. http://store.evsolutions.com/turbodock-ev-charging-stations-c42.aspx.

P5. Blink Level 2 Pedestal Charger by Blink. http://www.blinknetwork.com/file/18762/CCGI_Blink_EVSE-L2AC-G1_OwnersManual-Commercial_2.2%5B1%5D.pdf.

P6. Level 2 Commerical EV Charging Station by BTCPower. http://www.btcpower.com/products-and-applications/Level-2-Commercial-EV-Charging-Station/.

P7. BTCPower Dual Pedestal by BTCPower. http://www.thebluebook.com/iProView/813090/national-car-charging-llc/subcontractors//images/564078_-electric-vehicle-charging-stations/866745_btcpower-dual-pedestal.html.

P8. CT4000 Family by ChargePoint. https://www.chargepoint.com/products/commercial/ct4000/.

P9. ChargePoint Express 200 by ChargePoint. http://www.chargepoint.com/products/commercial/cpe200/.

P10. LCS-30 by ClipperCreek. https://store.clippercreek.com/all-products/lcs-30-24-amp-ev-charging-station.

P11. HCS-40 by ClipperCreek. https://store.clippercreek.com/all-products/hcs-40-hcs-40p-ev-charging-station.

P12. CS-40 by ClipperCreek. https://store.clippercreek.com/all-products/cs-40-32-amp-ev-charging-station.

P13. Public Charger by Efacec. http://electricmobility.efacec.com/ev-public-charger/.

P14. BusinessLine, by EV Box. http://www.ev-box.com/products/businessline/.

P15. 3704 AutoCoil EV Charger, by EVSE LLC. http://evsellc.com/download/AutoCoil_crop_6_9_15.pdf.

P16. EVoReel Charging Station by EVoCharge. https://www.evocharge.com/uploaded/Product_Page_1.jpg.

P17. Pedestal Mount – EVoReel Charging Station by EVoCharge. https://www.evocharge.com/uploaded/Product_Page_2.jpg.

P18. Double Pedestal by GE Industrial Solutions. http://apps.geindustrial.com/publibrary/checkout/DET-834?TNR=Cross%20Reference%7CDET-834%7CPDF&filename=DET-834.pdf.

P19. Mini Bar™ Double by Juice Bar. http://www.juicebarev.com/products/electric-car-charging-stations-mini-bar-double.

P20. PowerGen, by Millbank. http://milbankworks.com/blog/wp-content/uploads/2013/03/CPEV0111JSW1_Pedestal_2-2013_Web.pdf.
P21. Mark II, by OPConnect. http://www.opconnect.com/press/ev-charging-stations-solutions/.
P22. EV230PDRR by Schneider Electric. http://download.schneider-electric.com/files?p_Reference=0100CT1501_SEC-05&p_EnDocType=Catalog&p_File_Id=5024286529&p_File_Name=0100CT1501_SEC-05.pdf.
P23. DC Quick Charging by Schneider Electric. http://download.schneider-electric.com/files?p_Reference=0100CT1501_SEC-05&p_EnDocType=Catalog&p_File_Id=5024286529&p_File_Name=0100CT1501_SEC-05.pdf.
P24. ChargePro Charging Station, by SemaConnect. http://sweets.construction.com/Manufacturer/SEMACONNECT--INC--NST153424/products/ChargePro-Charging-Station-NST63552-P.
P25. Tower model S2211 by Shorepower Technologies. http://www.shorepower.com/docs/Shorepower_EVSE_Product_Datasheet.pdf.
P26. Siemens VersiCharge™, by Siemens. https://www.downloads.siemens.com/download-center/Download.aspx?pos=download&fct=getasset&id1=BTLV_41755.